ATyS a M

Preset Automatic Transfer Switching Equipment

from 25 to 160 A

The solution for

- Industry
- Building

Strong points

- Quick & easy commissioning
- Proven reliability
- Space saving

Conformity to standards

- IEC 60947-6-1
- GB 14048.11

Approvals and certifications

Function

ATyS a M supports the automatic transfer between two power supply sources - and safe isolation - for any low voltage installation. The product includes an integrated pre-set controller which automatically transfers the power supply between the normal source (main transformer) and the emergency source (generating set or main transformer). They are intended for on-load operations, where a brief interruption of the load supply is acceptable during transition between sources (I-0-II).

Advantages

Quick & easy commissioning
With an integrated and preset controller, configuration time is reduced to zero and the potential for human error is eliminated – making the commissioning process straightforward. ATyS a M timers and thresholds are defined for the most relevant Main/Main and Main/GenSet applications, which means that source transfer is managed automatically.

Proven reliability
ATyS a M has been designed and tested according to IEC 60947-6-1 and GB/T 14048.11, achieving performance of PC class – the most robust and reliable class, intended to preserve the transfer function for increased reliability and an improved return on investment. The AC-33B utilisation category confirms that the system is suitable for any type of load, including inductive loads such as motors.

Space saving
ATyS a M offers unrivalled flexibility for a seamless integration process, even in the most constrained enclosures and panels. Thanks to its modular design, mounting and cabling spaces are optimised to allow the use of more compact panels – which in turn reduces the total cost of ownership.

General characteristics

- Range from 32 to 160A.
- Available in 4P.
- AC-33B utilisation category.
- Automatic or manual operations.
- Padlocking facility.
- Optional Modbus communication.

What you need to know

The ATyS a M is automatic transfer switching equipment that include a fully integrated ATS controller. This product is self powered and pre-set.

References

Rating (A)	No. of poles	ATyS a M	Bridging bars	Terminal shrouds	Additionnal Auxiliary contact block (3)
25A	4P	9324 **4002**	9324 **0001**	9324 **0002** (1)	1 unit NO/NC Separate common points 1309 **1001**(2) Linked common points 1309 **1011**(2)
32 A		9324 **4003**			
40 A		9324 **4004**			
63 A		9324 **4006**			
80 A		9334 **4008**	1309 **4006**	2294 **4016** (1)	
100 A		9334 **4010**			
125 A		9334 **4012**			
160 A		9334 **4016**	1309 **4016**		

(1) For complete upstream and downstream protection please order 2 shrouds. If Socomec bridging bars are used only one shroud is necessary.
(2) 1 NO/NC contact block for positions I, 0 and II.
(3) One auxiliairy contact 1309 1001 delivered with each ATyS a M

Option module are only available up to 63 A	Reference
RS485 Modbus module	9335 **0001**
Fire input module 24Vdc	9335 **0002**
Genset output module	9335 **0003**

Preset parameters

- Nominal voltage: 380Vac
- Source voltage threshold +/- 20%
- Source voltage hysteresis +/- 15%
- Source frequency threshold +/- 10%
- Sources phases rotation check

Timer mnemonic	Timer name	Timer description	Timer factory setting
1RT	Source I return timer	When source 1 returns inside the limits, 1RT is started. At the end of 1RT, source 1 is then considered to be available. Should source 1 unavailable before the end of 1RT, the changeover will not be carried out.	2sec
1FT	Source I failure timer	When source 1 is considered unavailable, 1FT is started. If source 1 is considered restored (available again) before the end of 1FT, the changeover sequence will not be engaged.	2sec
2RT/2AT	Source II return timer / Source II Availability timer	When source 2 returns inside the limits, 2RT is started. At the end of 2RT, source 2 is then considered to be available. Should source 2 unavailable before the end of 2RT, the changeover will not be carried out.	2sec
2FT	Source II failure timer	When source 2 is considered unavailable, 2FT is started. If source 2 is considered restored (available again) before the end of 2FT, the changeover sequence will not be engaged.	2sec
0DT	0 dead timer	Minimum load downtime possibility with stop in position 0; to enable residual voltage generated by the load to dissapear.	0sec
DRT	Dynamic return timer	This timer is used to replace the return timer of the prioritary source in case of a retransfer back to main source, if we lost the backup source while the return timer is counting.	3sec
2CT	Genset cooldown timer	In Main-GenSet application, following a return to the priority source (when it is closed), the genset is kept running for the 2CT timer duration. This timer is intented to cool down the genset (off load) before switching it off.	180sec
2ST	Genset start timeout timer	"In Main-GenSet application, this timer is used to know if genset has started and turned available (end of 2AT) fast enough. Timer start as soon as the genset start order has been given. If 2AT has not been satisfied before the end of this timer, an error will be raised (Genset failed to start). In AUTO mode this timer does not affect the genset start request. During a test sequence, the test will be cancelled and the genset turned OFF."	30sec

Characteristics according to IEC 60947-6-1 and GB/T 14048.11

25 to 160 A

Frame size		**ATyS M 63 A**				**ATyS M 160 A**			
Thermal current I_{th} at 40°C		**25 A**	**32 A**	**40 A**	**63 A**	**80 A**	**100 A**	**125 A**	**160 A**
Rated insulation voltage U_i (V) (power circuit)		800	800	800	800	800	800	800	800
Rated impulse withstand voltage U_{imp} (kV) (power circuit)		6	6	6	6	6	6	6	6
Rated insulation voltage U_i (V) (control circuit)		450	450	450	450	300	300	300	300
Rated impulse withstand voltage U_{imp} (kV) (control circuit)		6	6	6	6	2.5	2.5	2.5	2.5
Rated operational currents I_e									
Rated voltage	**Utilisation category** (1)	**A/B**	**A/B**	**A/B**	**A/B**	**A/B**	**A/B**	**A/B**	**A/B**
415 VAC	AC-31 A / AC-31 B	25/25	32/32	40/40	63/63	80/80	100/100	100/125	100/160
415 VAC	AC-32 A / AC-32 B	25/25	32/32	40/40	63/63	80/80	100/100	100/125	100/160
415 VAC	AC-33i A / AC-33i B	25/25	32/32	40/40	63/63	-/80	-/100	-/125	-/160
415 VAC	AC-33 A / AC-33 B	-/25	-/32	-/40	-/63	-/80	-/100	-/125	-/125
Current rated as conditional short-circuit with fuse gG									
Conditional short-circuit current (kA rms)		50	50	50	50	50	50	50	50
Associated fuse rating (A)	gG fuse (A)	25	32	40	63	80	100	125	16 0
Current rated as conditional short-circuit with any brand of circuit breaker that ensures tripping in less than 0.3s (2)									
Current rated as short-time withstand Icw 0.3s (kA rms)		5	5	5	5	7	7	7	7
Short-circuit operation									
Current rated as short-time withstand Icw 1s (kA rms)		-	-	-	-	4	4	4	4
Rated peak withstand current Ip (kA peak)		7.65	7.65	7.65	7.65	17	17	17	17
Connection									
Minimum Cu cable cross-section (mm^2)		2.5	2.5	2.5	2.5	10	10	10	10
Maximum Cu cable cross-section (mm^2)		35	35	35	35	70	70	70	70
Tightening torque (Nm)		2.5	2.5	2.5	2.5	5	5	5	5
Switching time (3)									
I - 0 or II - 0, following a command (ms)		80	80	80	80	45	45	45	45
Transfer time I - II or II - I, following a command (ms)		220	220	220	220	180	180	180	180
I-II or II-I transfer time, after outage (s)		2.2	2.2	2.2	2.2	1.4	1.4	1.4	1.4
Contact transfer time ("black-out") I-II min. (ms)		140	140	140	140	150	150	150	150
Power supply									
Min./max. auxiliary power supply (VAC)		176-264	176-264	176-264	176-264	176/288	176/288	176/288	176/288
Control supply power demand									
Rated power (VA)		2	2	2	2	6	6	6	6
Max. intensity at 230 VAC (A)		17.7	17.7	17.7	17.7	30	30	30	30
Mechanical specifications									
Durability (number of operating cycles)		10 000	10 000	10 000	10 000	10 000	10 000	10 000	10 000
Weight - non-packaged (kg)		1.8	1.8	1.8	1.8	3.5	3.5	3.5	3.5
Weight - including packaging (kg)		2.3	2.3	2.3	2.3	4.2	4.2	4.2	4.2

(1) Category with index A = frequent operation / Category with index B = infrequent operation.
(2) Value for coordination with any circuit breaker that ensures tripping in less than 0.3s.
For coordination with specific circuit-breaker references, higher short-circuit current values are available. Please contact us.
(3) At rated voltage - excluding time delays, where applicable.

Dimensions (mm)

ATyS a M 25 to 63 A

4 poles automatic transfer switch

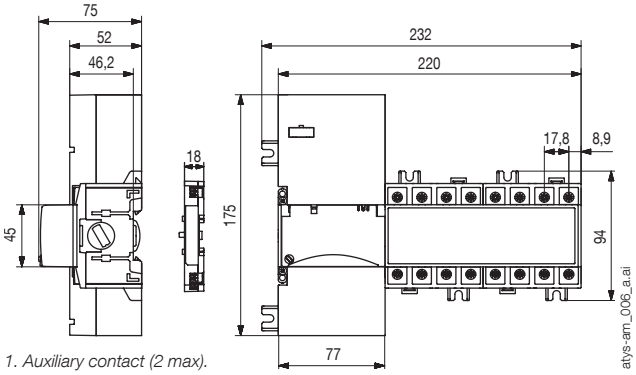

1. Auxiliary contact (2 max).

Door cut-out

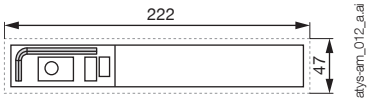

ATyS a M 80 to 160 A

4 poles automatic transfer switch

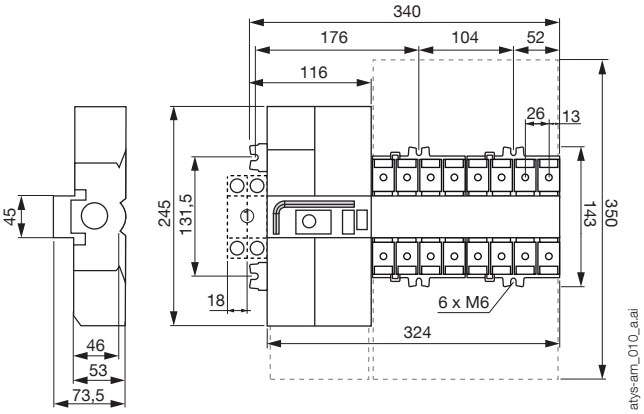

1. Auxiliary contact (2 max).

Door cut-out