INSTALLATION AND OPERATING MANUAL

EN

Three-phase energy meter
Direct - 80 A Ethernet

COUNTIS E27/E28

COUNTIS E27

COUNTIS E28 - MID

Socomec Resource Center
To download, brochures, catalogues
and technical manuals.

socomec
Innovative Power Solutions

EN CONTENTS

1. DOCUMENTATION . . . 3
2. HAZARDS AND WARNINGS . . . 4
2.1. Risk of electrocution, burns or explosion . . . 4
2.2. Risk of damaging the unit . . . 4
2.3. Responsibility . . . 4
3. PRELIMINARY OPERATIONS . . . 5
4. INTRODUCTION . . . 6
4.1. Introducing the COUNTIS E27/E28 . . . 6
4.2. Functions . . . 6
4.3. Front panels . . . 6
4.4. LCD display . . . 7
4.5. Dimensions . . . 7
4.6. Electrical values measured . . . 8
4.6.1. Measurements . . . 8
4.6.2. Energy balance; definition . . . 8
5. INSTALLATION . . . 9
5.1. Recommendations and safety . . . 9
5.2. DIN rail mounted . . . 9
6. CONNECTION . . . 10
6.1. Connecting the COUNTIS E27/E28 . . . 10
6.2. Connection to the electrical network and to the loads . . . 10
7. MID COMPLIANCE . . . 11
8. COMMUNICATION . . . 12
8.1. General information . . . 12
8.2. Communication structure . . . 12
8.3. Communication tables . . . 12
9. CONFIGURATION . . . 13
9.1. Onscreen configuration . . . 13
9.1.1. View all of the menu "SETUP 2" . . . 14
9.1.2. Detailed view of menu "SETUP 2" . . . 15
9.1.3. Example: setting the communication address . . . 16
10. USE . . . 17
10.1. Detailed view of the menu for tariff 1, "Tar.1" . . . 18
10.2. Detailed view of the menu for tariff 2, "Tar.2" . . . 19
10.3. Detailed view of the total menu, "tot" . . . 20
10.4. Detailed view of the menu showing partial readings and the energy balance "Par.b" . . . 21
10.4.1. Starting up the partial energy meter . . . 22
10.4.2. Stopping the partial energy meter . . . 22
10.4.3. Resetting the partial energy meter to zero . . . 22
10.5. Detailed view of the menu for realtime readings, "rt" . . . 23
10.6. Detailed view of the menu "info" . . . 24
11. DIAGNOSTICS MESSAGES . . . 25
12. ASSISTANCE . . . 25
13. CHARACTERISTICS . . . 26
14. LIST OF ABBREVIATIONS . . . 29

1. DOCUMENTATION

All documentation on the COUNTIS E27/E28 is available online:

2. HAZARDS AND WARNINGS

The term "device" used in the paragraphs below refers to the COUNTIS E27/E28.

The assembly, use, servicing and maintenance of this equipment must only be carried out by trained, qualified professionals.

SOCOMEC shall not be held responsible for failure to comply with the instructions in this manual.

2.1. Risk of electrocution, burns or explosion

- This device must only be installed and serviced by qualified personnel who have in-depth knowledge of installing, commissioning and operating the device and who have had appropriate training. He or she should have read and understood the various safety measures and warnings stated in the instructions.
- Before carrying out any work on the unit, switch off the voltage inputs.
- Always use an appropriate voltage detection device to confirm the absence of voltage.
- Replace all devices, doors and covers before turning on power to this equipment.
- Always power the device with the correct rated voltage.
- Install the unit following the recommended installation instructions and in a suitable electrical cabinet.

Failure to take these precautions could cause death or serious injuries.

2.2. Risk of damaging the unit

To ensure that the unit operates correctly, make sure that:

- The unit is correctly installed.
- There is a maximum voltage at the voltage input terminals of 288 VAC phase-neutral
- The network frequency indicated on the device is observed: 50 or 60 Hz.
- There is a maximum current of 80 A at the current input terminals (I1, I2 and I3).

Failure to respect these precautions could cause damage to the unit.

2.3. Responsibility

- Assembly, connection and use must be carried out in accordance with the installation standards currently in force.
- The unit must be installed in accordance with the rules given in this manual.
- Failure to observe the rules for installing this unit may compromise the device's intrinsic protection.
- The unit must be positioned within an installation which complies with the standards currently in force.
- Any cable which needs to be replaced may only be replaced with a cable having the correct rating.

3. PRELIMINARY OPERATIONS

To ensure the safety of staff and the equipment, it is vital to read and absorb the contents of these instructions thoroughly before commissioning.

Check the following points as soon as you receive the package containing the unit:

- The packaging is in good condition
- The unit has not been damaged during transportation
- The device reference number conforms to your order
- The package includes:
  - 1 device
  - 1 ferrite core
  - 1 sealing kit (for COUNTIS E28)
  - 1 Quick Start guide

4. INTRODUCTION

4.1. Introducing the COUNTIS E27/E28

The COUNTIS E27 and E28 are modular active and reactive electrical energy meters that display consumed energy. They are designed for three-phase networks and allow a direct connection of up to 80 A. They are equipped with an Ethernet communication Bus.

4.2. Functions

- Measures and displays total and partial energy
- Dual tariff management: T1 / T2
- Electrical parameter measurements: I, U, V, f
- Power, power factor
- TCP Modbus communication
- MID version (according to reference)

Description	***Reference***
COUNTIS E27	4850 **3054**
COUNTIS E28 - Version MID	4850 **3055**

4.3. Front panels

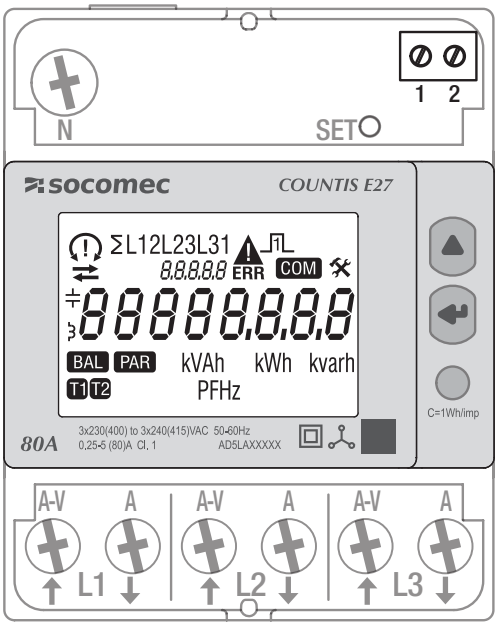

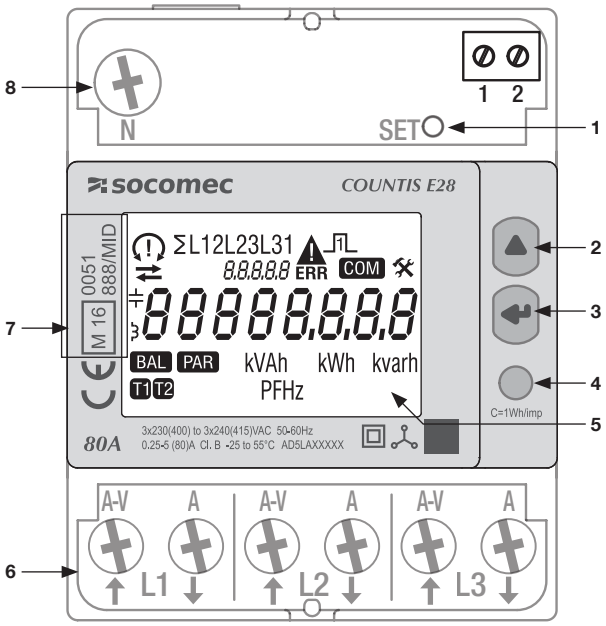

1. SET button
2. UP button
3. ENTER key
4. Metrological LED
5. LCD display
6. Three-phase network connection
7. Information relating to MID certification
8. Neutral connection

4.4. LCD display

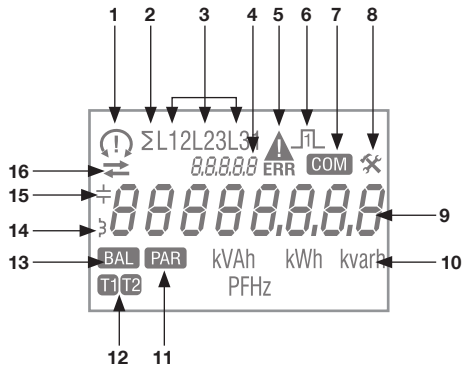

1. Phase sequences:
   132
   123
   one or multiple phases are not detected
2. System value
3. Value by phase
4. Identification of current menu
5. Device malfunction. Replace the device
6. Active pulse output
7. Active communication
8. Setup menu
9. Main zone
10. Measurement Unit
11. Partials meters. Flashing = partial meter has stopped
12. Tariff display
13. Energy balance
14. Inductive value
15. Capacitive value
16. Imported (→) or exported energy or power (←)

4.5. Dimensions

Dimensions: *in*/mm

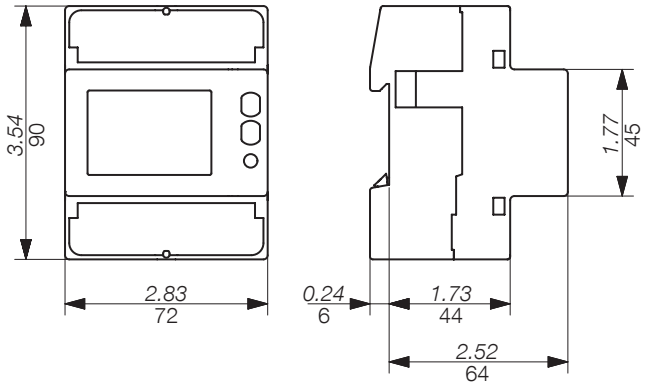

4.6. Electrical values measured

4.6.1. Measurements

Settings vary by model.

Realtime values	***Symbol***	***Measure-ment Unit***	***LCD display***	***Via communication***
Neutral voltage	∑V	V	●	●
	V1, V2, V3			●
Phase to phase voltage	∑U		●	●
	U12, U23, U31			●
Current	∑I	A	●	●
	I1, I2, I3, IN			●
Power factor	∑PF		●	●
	PF1, PF2, PF3			●
Apparent power	∑S, S1, S2, S3	kVA	●	●
Active power	∑P, P1, P2, P3	kW	●	●
Reactive power	∑Q, Q1, Q2, Q3	kVAr	●	●
Frequency	f	Hz	●	●
Phase sequence	CW / CCW		●	●
Direction of current	⇄		●	
Logged data				
Total active and reactive energy	Ea, Er (∑ & by phase)	kWh, kvarh	●	●
Total apparent energy	Eap (∑)	kVAh	●	●
	Eap (per phase)			●
Total reactive, inductive and capacitive energy	Er (∑)	kvarh	●	●
	Er (per phase)			●
Total active, reactive and apparent energy for each tariff (T1/T2)	Ea, Er (∑)	kWh, kvarh	●	●
	Ea, Er, Eap (∑ & per phase)	kWh, kvarh, kVAh		●
Total reactive, inductive and capacitive energy for each tariff (T1/T2)	Er (∑)	kvarh	●	●
	Er (per phase)			●
Active, partial energy for each tariff (T1/T2)	Ea (∑)	kWh	●	●
Active, reactive and apparent partial energy	Ea, Er, Eap (∑)	kWh, kvarh, kVAh	●	●
Energy balance	∑	kWh, kvarh	●	●
Miscellaneous				
Current tariff	T	1/2		●
Partial meters	BY	START/STOP	●	
State of the pulse output	⎍	Active / inac-tive	●	

NOTE: ∑ is the sum of the meter readings for each phase, divided by 3.

4.6.2. Energy balance; definition

	Formula
kWh	(+kWh T1) – (-kWh T1) + (+kWh T2) – (-kWh T2)
kvarh	(+kvarh T1) – (-kvarh T1) + (+kvarh T2) – (-kvarh T2)

5. INSTALLATION

The paragraphs below describe how to install the device.

5.1. Recommendations and safety

Refer to the safety instructions (section "2. Hazards and warnings", page 4)

- Keep away from electromagnetic interference generator systems,
- Avoid vibrations with accelerations greater than 1 g for frequencies lower than 60 Hz.

5.2. DIN rail mounted

The COUNTIS E27/E28 can be mounted on a 35-mm DIN rail (EN 60715TM35). They must be used inside electrical cabinets.

6. CONNECTION

6.1. Connecting the COUNTIS E27/E28

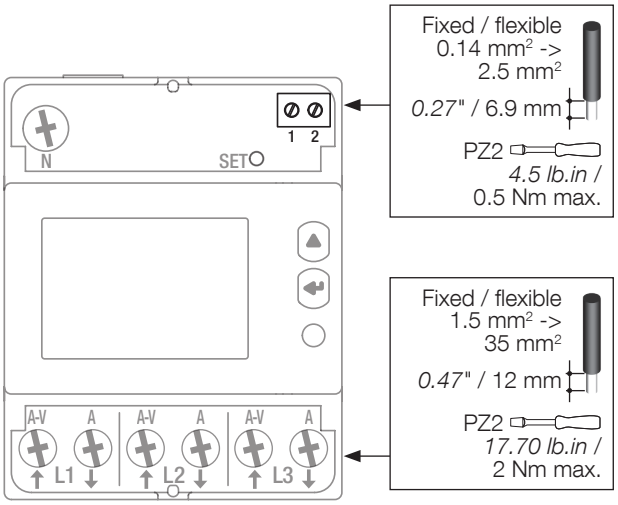

6.2. Connection to the electrical network and to the loads

The COUNTIS E27 and E28 are intended for three-phase networks with neutral.

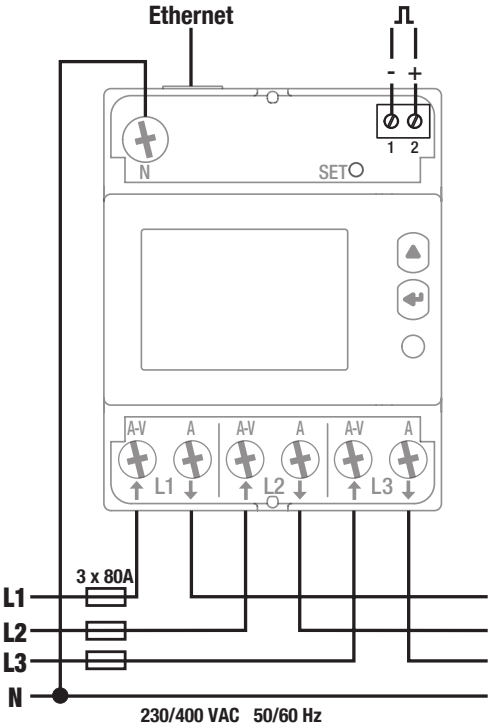

Ethernet
RJ45. The Ethernet cable must pass twice through the ferrite core, positioned at least 5 cm away from the device.

Pulse output
1: -
2: +

Optocoupler pulse outputs
Terminals 1-2 must be supplied with voltage between 5 and 27 VDC (27mA max)

Mains
L1 A-V: Phase input
L1 A: Phase output
L2 A-V: Phase input
L2 A: Phase output
L3 A-V: Phase input
L3 A: Phase output
N: Neutral connection

7. MID COMPLIANCE

The following points must be taken into consideration to ensure that the device is used in compliance with directive MID 2014/32/EU:

- **Type of network**
  COUNTIS E28 meters comply with the MID directive for connection to networks: 3P+N (see "6.2. Connection to the electrical network and to the loads", page 10)
- **Fitting terminal covers**
  After connecting the device, ensure that the terminal covers are fitted properly and secured by the plastic seals provided with the device.
- **Locking the program button**
  Make sure the SET program button is locked after fitting the terminal cover.
- **Communication**
  The information provided via the TCP Modbus COM is transmitted for information only and has no legal value.
- **MID Declaration of Conformity**
  The MID Declaration of Conformity is available on the website: www.socomec.com/en/countis-e2x

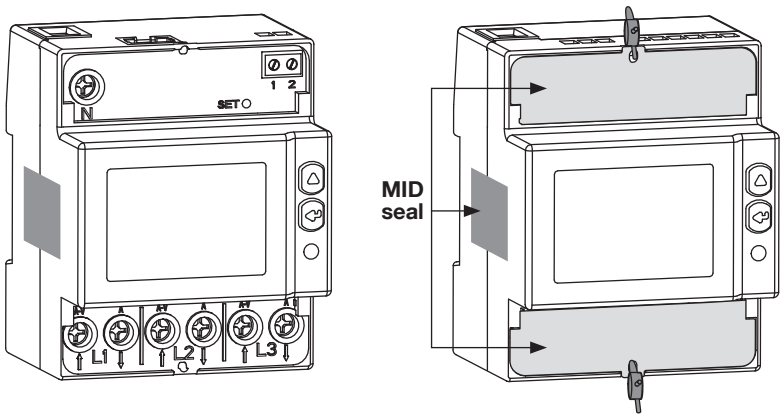

8. COMMUNICATION

8.1. General information

The Modbus communication available on the COUNTIS E27/E28 communicates via an Ethernet link which is used to operate devices from a PC or an API.

8.2. Communication structure

The device communicates via a Modbus protocol which involves a dialogue in accordance with a master/slave structure. Communication is via TCP (Transmission Control Protocol) through the Ethernet communication port.

The default IP address is:

IP address: 192.168.0.4
Subnet Mask: 255.255.255.000
Gateway: 192.168.0.1
Modbus address: 5

A web server lets you access the measurement data:

The broadcast communication is available for the log that stores the tariff.

8.3. Communication tables

The communication tables are available online:

9. CONFIGURATION

The device can be configured directly from the COUNTIS E27/E28 screen in programming mode or via the communication link. The paragraphs below describe configuring using the screen.

9.1. Onscreen configuration

From the screen, go to programming mode to change your communication settings. How to browse through the programming mode is described in the following stages:

Function	Where	Buttons	Press
Switch menus	Every page with the exception of SETUP 1/2	↵	Realtime
Switch pages within a menu	Every page within a menu	▲	Realtime
Go to menu SETUP 2	Menu page SETUP	↵	> 3 sec
Go to menu SETUP 1	Every page with the exception of SETUP 1	**SET**	> 3 sec
Change a value/digit	Pages SETUP 1/2	▲	Realtime
Confirm a value/digit	Pages SETUP 1/2	↵	Realtime
Exit menu SETUP 1/2	Menu SETUP 1/2	↵	> 3 sec
Start/stop the displayed partial meter	Partial meter menu	↵ + ▲	Realtime
Reset the displayed partial meter to zero	Partial meter menu	↵ + ▲	> 3 sec
Display test	Every page with the exception of SETUP 1/2	↵ + ▲	> 10 sec

9.1.1. View all of the menu "SETUP 2"

In the SETUP 2 menu, press "↵" for 3 seconds to put the device into programming mode.

You can go to the different screens by pressing "▲":

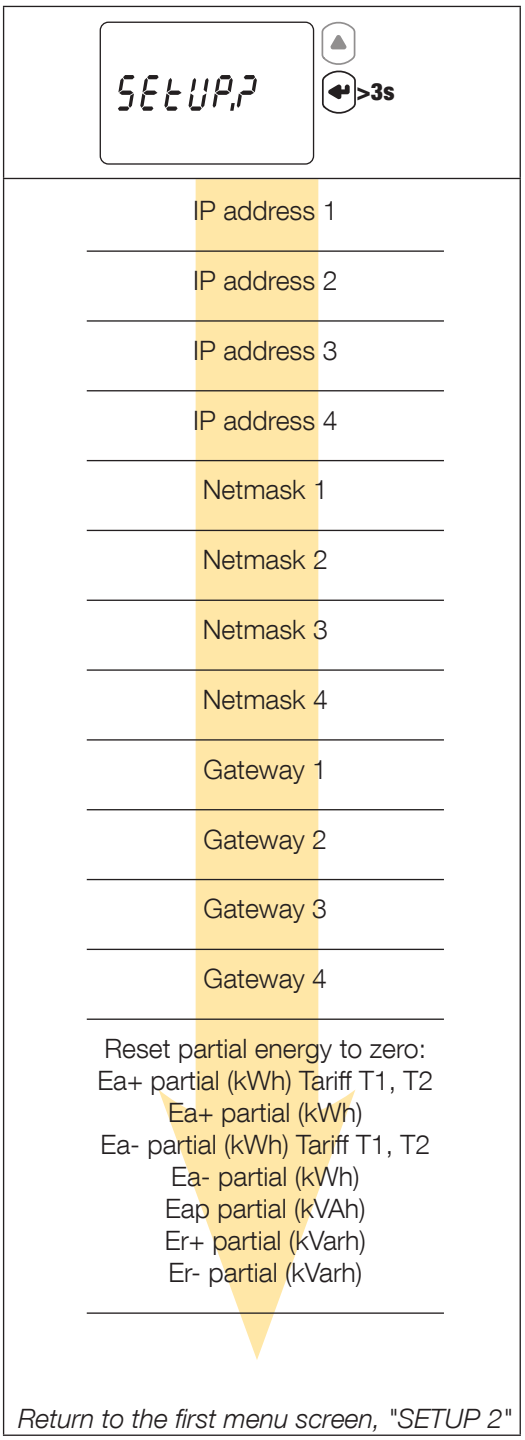

9.1.2. Detailed view of menu "SETUP 2"

SETUP2 ▲ ↵ >3s

Configuring with default settings

SETUP Eth SdEF *	Configuring devices with default settings

▲ x1

↵

IP address 1

SETUP IP1 192 *	000, 001, ... **192**, ..., 254, 255

IP address 2

SETUP IP2 168 *	000, 001, ... **168**, ..., 254, 255

IP address 3

SETUP IP3 000 *	**000**, 001, ..., 254, 255

IP address 4

SETUP IP4 004 *	000, 001, ... **004**, ..., 254, 255

Netmask 1

SETUP nEt1 255 *	000, 001, ..., 254, **255**

Netmask 2

SETUP nEt2 255 *	000, 001, ..., 254, **255**

Netmask 3

SETUP nEt3 255 *	000, 001, ..., 254, **255**

Netmask 4

SETUP nEt4 000 *	**000**, 001, ..., 254, 255

Gateway 1

SETUP GAt1 192 *	000, 001, ... **192**, ..., 254, 255

Gateway 2

SETUP GAt2 168 *	000, 001, ... **168**, ..., 254, 255

Gateway 3

SETUP GAt3 000 *	**000**, 001, ..., 254, 255

Gateway 4

SETUP GAt4 001 *	000, **001**, ..., 254, 255

Reset energies

SETUP rES ALL * PAR	Ea+ partial Tariff T1, T2; Ea+ partial; Ea- partial Tariff T1, T2; Ea- partial; Eap partial; Er+ partial; Er- partial

Go back to the first menu screen, "SETUP 2"

9.1.3. Example: setting the communication address

In "SETUP 2" mode (see page 13), go to the "IP address 1" screen

Example: changing the communication address to IP 007.

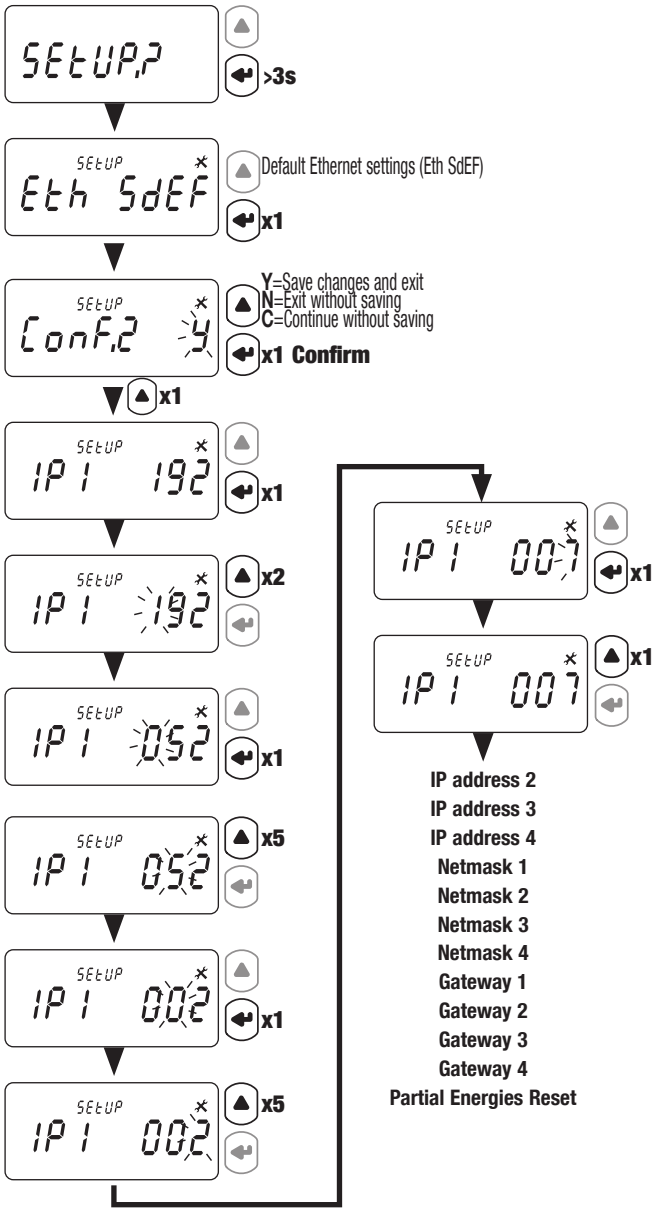

XX = default value

10. USE

Switch menus by pressing "". Press "" to see the electrical readings or information within a menu.

The menus and related measurements are described in the table below:

Tariff 1 (Tar.1)	Tariff 2 (Tar.2)	Total (tot)	Partial readings and energy balance (Par.b)	Realtime values (rt)	Information (inFo)
Tariff 1 - Imported and exported active energy	Tariff 2 - Imported and exported active energy	Total imported and exported active energy	Partial imported active energy by tariff	Active, apparent and reactive power	Metrological firmware version
Tariff 1 - Imported and exported inductive reactive energy	Tariff 2 - Imported and exported inductive reactive energy	Total apparent energy	Partial imported active energy	Phase/phase and phase/neutral voltage	Non-metrological firmware version
Tariff 1 - Imported and exported capacitive reactive energy	Tariff 2 - Imported and exported capacitive reactive energy	Total imported and exported inductive reactive energy	Partial exported active energy by tariff	Three-phase current	Checksum of metrological firmware
Tariff 1 - Imported and exported reactive energy	Tariff 2 - Imported and exported reactive energy	Total imported and exported capacitive reactive energy	Partial exported active energy	Power factor	Checksum of non-metrological firmware
Go back to first screen, menu "Tar.1"	*Go back to first screen, menu "Tar.2"*	Total imported and exported reactive energy	Partial apparent energy	Frequency	Installed communication port
		Go back to first screen, menu "tot"	Partial imported and exported reactive energy	*Go back to first screen, menu "rt"*	*Go back to first screen, menu "info"*
			Active energy balance		
			Reactive energy balance		
			Go back to first screen, menu "Par.b"		

10.1. Detailed view of the menu for tariff 1, "Tar.1"

Imported active energy, tariff 1

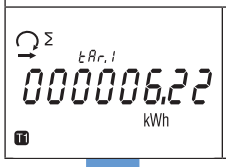

Exported active energy, tariff 1

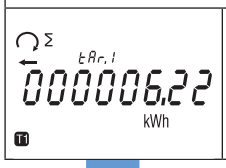

Imported inductive reactive energy, tariff 1

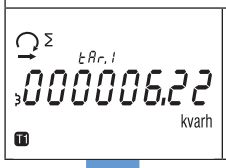

Exported inductive reactive energy, tariff 1

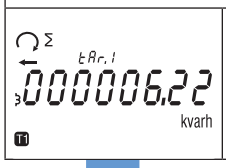

Imported capacitive reactive energy, tariff 1

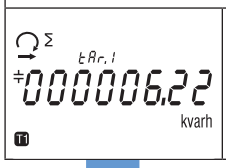

Exported capacitive reactive energy, tariff 1

Imported reactive energy, tariff 1

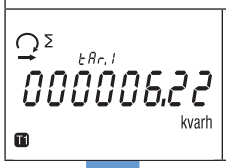

Exported reactive energy, tariff 1

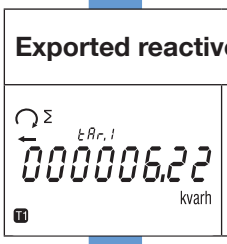

Go back to first screen, menu "Tar.1"

10.2. Detailed view of the menu for tariff 2, "Tar.2"

Imported active energy, tariff 2

Σ tAr.2 000006.22 kWh T2

Exported active energy, tariff 2

Σ tAr.2 000006.22 kWh T2

Imported inductive reactive energy, tariff 2

Σ tAr.2 000006.22 kvarh T2

Exported inductive reactive energy, tariff 2

Σ tAr.2 000006.22 kvarh T2

Imported capacitive reactive energy, tariff 2

Σ tAr.2 000006.22 kvarh T2

Exported capacitive reactive energy, tariff 2

Σ tAr.2 000006.22 kvarh T2

Imported reactive energy, tariff 2

Σ tAr.2 000006.22 kvarh T2

Exported reactive energy, tariff 2

Σ tAr.2 000006.22 kvarh T2

Go back to first screen, menu "Tar.2"

10.3. Detailed view of the total menu, "tot"

Total imported active energy

L1 tot 00000008.32 kWh — L1, L2, L3, ∑

Total exported active energy

L1 tot 00000008.32 kWh — L1, L2, L3, ∑

Total apparent energy

Σ tot 00000008.32 kVAh — ∑

Total imported inductive reactive energy

Σ tot 00000008.32 kvarh — ∑

Total exported inductive reactive energy

Σ tot 00000008.32 kvarh — ∑

Total imported capacitive reactive energy

Σ tot 00000008.32 kvarh — ∑

Total exported capacitive reactive energy

Σ tot 00000008.32 kvarh — ∑

Total imported reactive energy

L1 tot 00000008.32 kvarh — L1, L2, L3, ∑

Total exported reactive energy

L1 tot 00000008.32 kvarh — L1, L2, L3, ∑

Go back to first screen, menu "tot"

10.4. Detailed view of the menu showing partial readings and the energy balance "Par.b"

Imported partial active energy for tariff T1

Σ Par.b 00000854 PAR kWh T1 ∑

Imported partial active energy for tariff T2

Σ Par.b 00000854 PAR kWh T2 ∑

Partial imported active energy

Σ Par.b 00000854 PAR kWh ∑

Exported partial active energy for tariff T1

Σ Par.b 00000854 PAR kWh T1 ∑

Exported partial active energy for tariff T2

Σ Par.b 00000854 PAR kWh T2 ∑

Partial exported active energy

Σ Par.b 00000854 PAR kWh ∑

Partial apparent energy

Σ Par.b 00000854 PAR kVAh ∑

Partial imported reactive energy

Σ Par.b 00000854 PAR kvarh ∑

Partial exported reactive energy

Σ Par.b 00000854 PAR kvarh ∑

Active energy balance

Σ Par.b 00000854 BAL kWh

Reactive energy balance

L1 Par.b 00000832 kvarh

Go back to first screen, menu "Par.b"

10.4.1. Starting up the partial energy meter

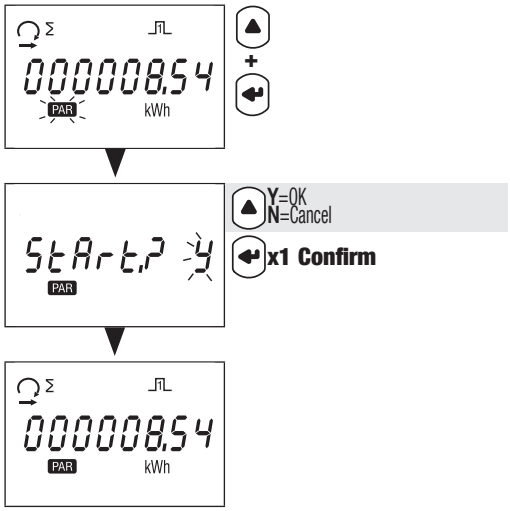

10.4.2. Stopping the partial energy meter

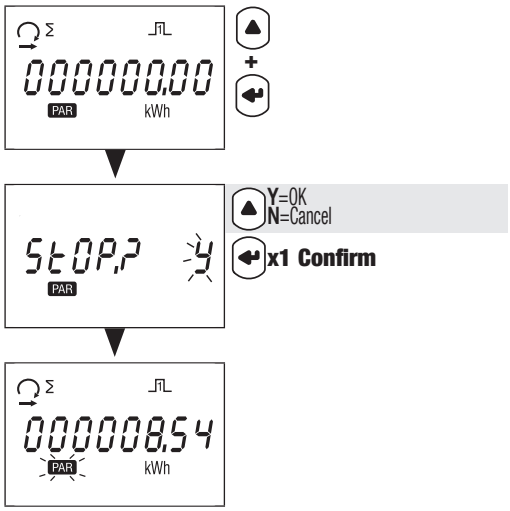

10.4.3. Resetting the partial energy meter to zero

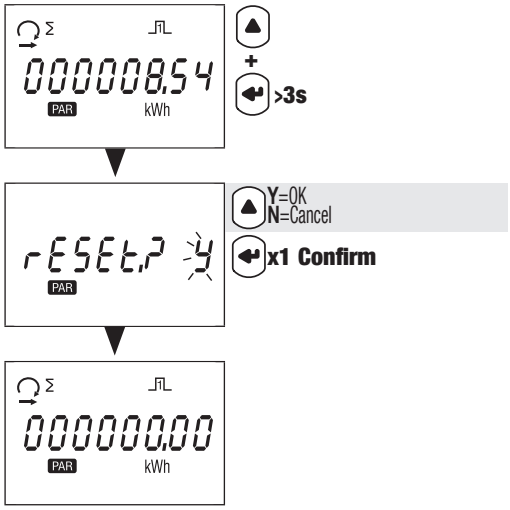

10.5. Detailed view of the menu for realtime readings, "rt"

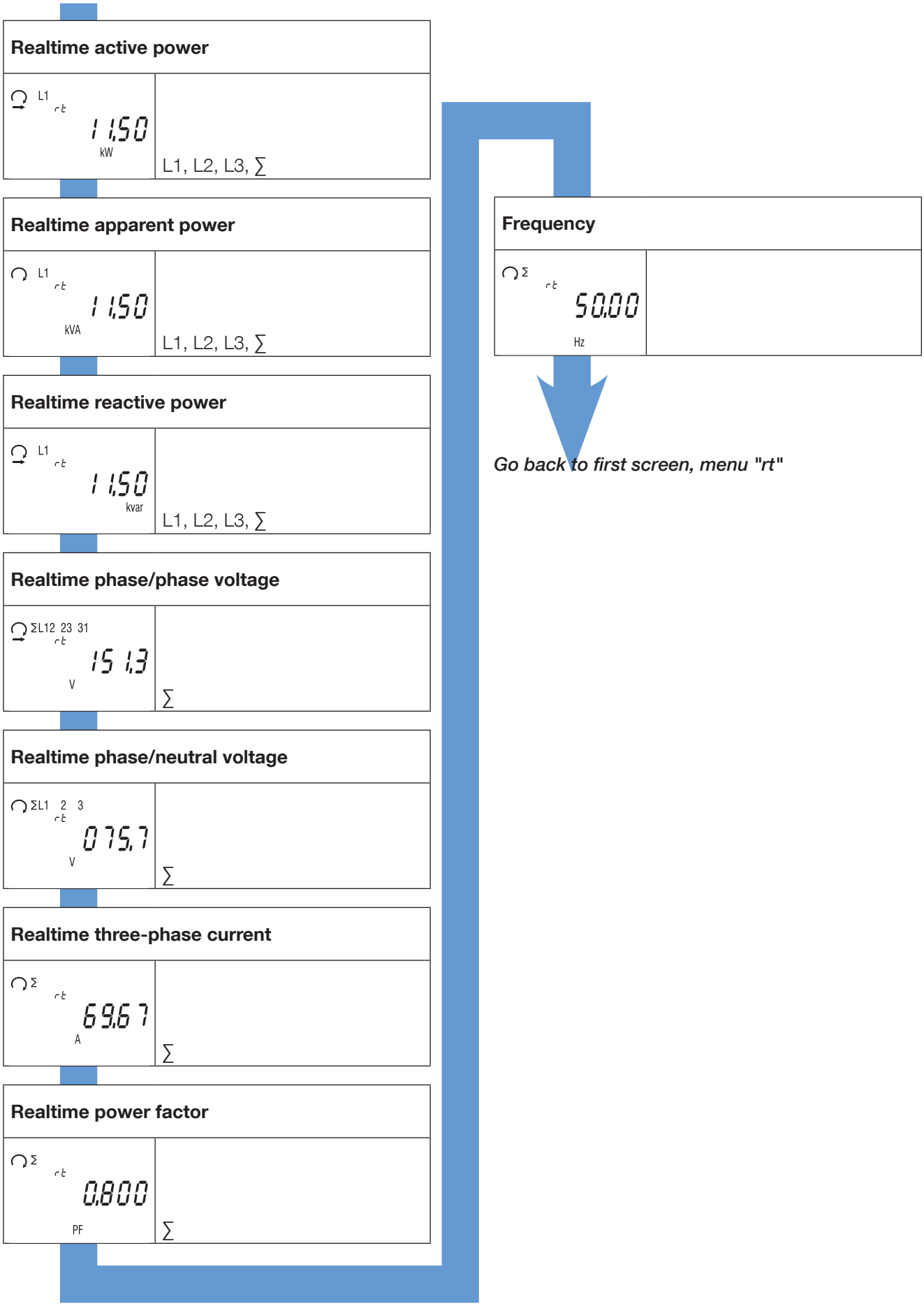

10.6. Detailed view of the menu "info"

Metrological firmware version	
info rEL1 1.22	

Non-metrological firmware version	
info rEL2 3.02	

Checksum of metrological firmware	
info CS1 7A37	

Checksum of non-metrological firmware	
info CS2 6b87	

Installed communication port	
info Eth	

Go back to first screen, menu "info"

11. DIAGNOSTICS MESSAGES

The following messages appear if there are connection or malfunction errors.

11.1. Missing phases

- If one or several phases are not detected, the exclamation point flashes on the screen. Example: phase not detected

11.2. Reversed phases

- If a 123 phase sequence is detected, the symbol appears.
- If a 132 phase sequence is detected, the symbol appears.

11.3. Malfunction

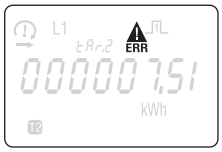

- If you see this message, the meter has malfunctioned and must be replaced.

12. ASSISTANCE

Causes	Solutions
Device not working	Check the neutral and phase 1 cable connections.
Phases not shown onscreen	Check the connections
Phases reversed onscreen	Check the network configuration
Error message	Check the meter is working OK

13. CHARACTERISTICS

GENERAL FEATURES	
Compliant with	European EMC Directive No. 2014/30/EU dated 26/02/2014 LV Directive No. 2014/35/EU dated 26/02/2014 Measuring Instrument Directive MID No. 2014/32/EU dated 26/02/2014 EN50470-1/-3 IEC 62053-21/-23
Frequency	50 and 60 Hz (± 1 Hz)
Power supply	Self-supplied
Rated dissipated power (Wmax.)	7.5VA (0.5W)
FEATURES	
Three-phase connectivity	4 wires 3x230/400V to 3x240/415V
Stores energy readings and settings	In FRAM memory
Identifies display of tariffs	T1 and T2
CURRENT MEASUREMENTS	
Type	Three-phase - direct 80 A
Input consumption	0.5VA max. per phase
Startup current (Ist)	20mA
Minimum current (Imin)	0.25A
Transition current (Itr)	0.5A
Reference current (Iref)	5A
Permanent overload (Imax)	80A
Intermittent overload	30 Imax for 1/2 cycle
OVERLOAD CAPACITY	
DC voltage Un	288 VAC
Realtime voltage Un (1 s)	300 VAC
DC current Imax	80 A
Realtime current Imax	30 Imax for 1/2 cycle
VOLTAGE MEASUREMENTS	
Range of measurement	230-240V ± 20%
Consumption	3.5VA max. per phase
Permanent overload	290V phase-neutral / 500V phase-phase
FREQUENCY MEASUREMENT	
Frequency measurement	45-65 Hz
ENERGY MEASUREMENT	
Active	Yes
Reactive	Yes
Total and partial reading	Yes
MID metering	Bidirectional with three-phase
Resolution	10 Wh, 10 varh
ENERGY ACCURACY	
Active energy Ea+	Class B (EN 50470-3) E28 Class 1 (IEC 62053-21)
Reactive energy Er+	Class 2 (CEI 62053-23)

TARIFF for Ea+	
Tariff management	Yes (via communication)
Number of tariffs managed	2
METROLOGICAL LED (Ea+, Ea-)	
Pulse value	1000 pulses / kWh
Colour	Red
PULSE OUTPUT	
Type	Opto-isolated - 5 … 27VDC 27mA according to EN 62053-31
Pulse weight	100 Wh
DISPLAY	
Type	8-digit LCD with backlight
Refresh time	1 s
Backlight activation time	10 s
Active energy: 1 display, 8-digit	000000.01 - 999999.99 kWh
Reactive energy: 1 display, 8-digit	000000.01 - 999999.99 kvarh
Apparent energy: 1 display, 8-digit	000000.01 - 999999.99 kVAh
Realtime active power: 1 display, 4-digit	00.00 - 99.99 kW
Realtime reactive power: 1 display, 4-digit	00.00 - 99.99 kvar
Realtime reactive power: 1 display, 4-digit	00.00 ... 99.99 kVA
Realtime voltage: 1 display, 4-digit	000.0 ... 999.9 V
Realtime current: 1 display, 4-digit	00.00 ... 99.99 A
Power factor: 1 display, 4-digit	0.001-1.000
Frequency: 1 display, 4-digit	45.00-65.00 Hz
COMMUNICATION	
Ethernet	Full duplex
Protocol	Modbus TCP, HTTP, NTP, DHCP
Baudrate	10/100 Mbps
Web server password	Username: admin / password: Admin Username: user / password: user
Default IP address Default Gateway IP address Default netmask Default slave address	192.168.0.4 192.168.0.1 255.255.255.000 5
SAVING	
Energy registers	In FRAM memory
ENVIRONMENTAL CONDITIONS	
Mechanical environment	M1
Electromagnetic environment	E2
Operating temperature range	-25°C to +55°C
Storage temperature	-25°C to 75°C
Humidity	≤ 80%
Installation	Internal (box/cabinet)
Vibrations	±0.075 mm

HOUSING	
Dimensions W x H x D (mm)	Modular - width of 4 modules (DIN 43880) 72 x 90 x 64
Mounting	On DIN rail (EN 60715)
Connection capacity, tightening torque	See chapter "6. Connection", page 10
Protection index	Front: IP51 - casing: IP20
Insulation class	Class II (EN 50470-1)
Weight	440 g

14. LIST OF ABBREVIATIONS

info	Menu information
rEL1	Metrological firmware version
rEL2	Non-metrological firmware version
CS1	Checksum of metrological firmware
CS2	Checksum of non-metrological firmware
tAr.1	Menu for Tariff 1
tAr.2	Menu for Tariff 2
tot	Total menu
PAr.b	Partial readings and energy balance menu
rt	Realtime values menu
SEtuP.2	Setup 2 menu
Addr	Slave address
bAud	Communication speed in bauds (bits per second)
Prty	Communication frame parity
n	No parity
o	Off parity
E	Even parity
StoP	Frame stop bit
1	1 stop bit
2	2 stop bits
rES	Reset partial energy
ConF?	Confirm selection
Y	Save and exit
N	Exit without saving
C	Continue without saving
tAr	Tariff management option
COM	Tariff management via communication
diG	Tariff management via device input

CORPORATE HQ CONTACT:
SOCOMEC SAS
1-4 RUE DE WESTHOUSE
67235 BENFELD, FRANCE

www.socomec.com

Non contractual document. © 2025, Socomec SAS. All rights reserved.

545881B

socomec
Innovative Power Solutions