INSTALLATION AND OPERATING MANUAL

EN

Three-phase Energy meter Measure via CT up to 12 000A - Ethernet MODBUS

COUNTIS E47/E48

COUNTIS E47

COUNTIS E48 - MID

Socomec Resource Center
To download, brochures, catalogues and technical manuals.

socomec
Innovative Power Solutions

EN CONTENT

1. DOCUMENTATION 4
2. HAZARDS AND WARNINGS. 4
2.1. Risk of electrocution, burns or explosion. 4
2.2. Risk of damaging the unit 4
2.3. Responsibility 4
3. PRELIMINARY OPERATIONS 5
4. INTRODUCTION 6
4.1. Introducing the COUNTIS E47/E48 6
4.2. Functions 6
4.3. Front panel 6
4.4. LCD display 7
4.5. Dimensions 7
4.6. Electrical values measured 8
4.6.1. Measurements 8
4.6.2. Energy balance definition 9
5. INSTALLATION 9
5.1. Recommendations and safety. 9
5.2. DIN rail mounted 9
6. CONNECTION. 10
6.1. Connecting the COUNTIS E47/E48. 10
6.2. Connection to the electrical network and to the loads. 10
7. MID COMPLIANCE 11
8. COMMUNICATION 12
8.1. General information 12
8.2. Communication structure 12
8.3. Communication tables 12
9. CONFIGURATION 13
9.1. Onscreen configuration 13
9.1.1. Detailed view of menu "SETUP 1". 14
9.1.2. View all of the menu "SETUP 2" 15
9.1.3. Detailed view of menu "SETUP 2". 16
9.1.4. Example: setting the communication address 17
10. USE 18
10.1. Detailed view of the menu for tariff 1, "Tar.1" 19
10.2. Detailed view of the menu for tariff 2, "Tar.2" 20
10.3. Detailed view of the menu for tariff 3, "Tar.3" 21
10.4. Detailed view of the menu for tariff 4, "Tar.4" 22
10.5. Detailed view of the total menu, "tot" 23
10.6. Detailed view of the menu showing partial readings and the energy balance "Par.b" 24
10.6.1. Starting up the partial energy meter 25
10.6.2. Stopping the partial energy meter 25
10.6.3. Resetting the partial energy meter to zero. 25
10.7. Detailed view of the menu for realtime readings, "rt" 26
10.8. Detailed view of the menu "info" 27

11. DIAGNOSTICS MESSAGES 28
11.1. Missing phases 28
11.2. Reversed phases 28
11.3. Malfunction 28
12. ASSISTANCE. 29
13. CHARACTERISTICS 30
14. GLOSSARY OF ABBREVIATIONS 33

1. DOCUMENTATION

All documentation on the COUNTIS E47/E48 is available online:

2. HAZARDS AND WARNINGS

The term "device" used in the paragraphs below refers to the COUNTIS E47/E48.

The assembly, use, servicing and maintenance of this equipment must only be carried out by trained, qualified professionals.

SOCOMEC shall not be held responsible for failure to comply with the instructions in this manual.

2.1. Risk of electrocution, burns or explosion

- This device must only be installed and serviced by qualified personnel who have in-depth knowledge of installing, commissioning and operating the device and who have had appropriate training. He or she should have read and understood the various safety measures and warnings stated in the instructions.
- Before carrying out any work on the unit, switch off the voltage inputs.
- Always use an appropriate voltage detection device to confirm the absence of voltage.
- Replace all devices, doors and covers before turning on power to this equipment.
- Always power the device with the correct rated voltage.
- Install the unit following the recommended installation instructions and in a suitable electrical cabinet.

Failure to take these precautions could cause death or serious injuries.

2.2. Risk of damaging the unit

To ensure that the unit operates correctly, make sure that:

- The unit is correctly installed.
- There is a maximum voltage at the voltage input terminals of 288 VAC phase-neutral
- The network frequency indicated on the device is observed: 50 or 60 Hz.
- There is a maximum current of 6 A at the current input terminals (I1, I2 and I3).

Failure to respect these precautions could cause damage to the unit.

2.3. Responsibility

- Assembly, connection and use must be carried out in accordance with the installation standards currently in force.
- The unit must be installed in accordance with the rules given in this manual.
- Failure to observe the rules for installing this unit may compromise the device's intrinsic protection.
- The unit must be positioned within an installation which complies with the standards currently in force.
- Any cable which needs to be replaced may only be replaced with a cable having the correct rating.

3. PRELIMINARY OPERATIONS

To ensure the safety of staff and the equipment, it is vital to read and absorb the contents of these instructions thoroughly before commissioning.

Check the following points as soon as you receive the package containing the unit:

- The packaging is in good condition
- The unit has not been damaged during transportation
- The device reference number conforms to your order
- The package includes:
  - 1 device
  - 1 sealing kit (for COUNTIS E48)
  - 1 Quick Start Guide

4. INTRODUCTION

4.1. Introducing the COUNTIS E47/E48

The COUNTIS E47/E48 are modular active and reactive electrical energy meters that displays consumed and produced energy. They are designed for three-phase networks and can be connected using a CT 1/5 A on installations up to 12000 A.

4.2. Functions

- Measures and displays bidirectional total and partial energy
- Four tariff management : T1 / T2 / T3 / T4
- Pulse output
- Electrical parameter measurements: I, U, V, f
- Bidirectional Power, power factor
- Modbus TCP communication
- MID

DESCRIPTION	REFERENCE
COUNTIS E47	**4850 3056**
COUNTIS E48	**4850 3057**

4.3. Front panel

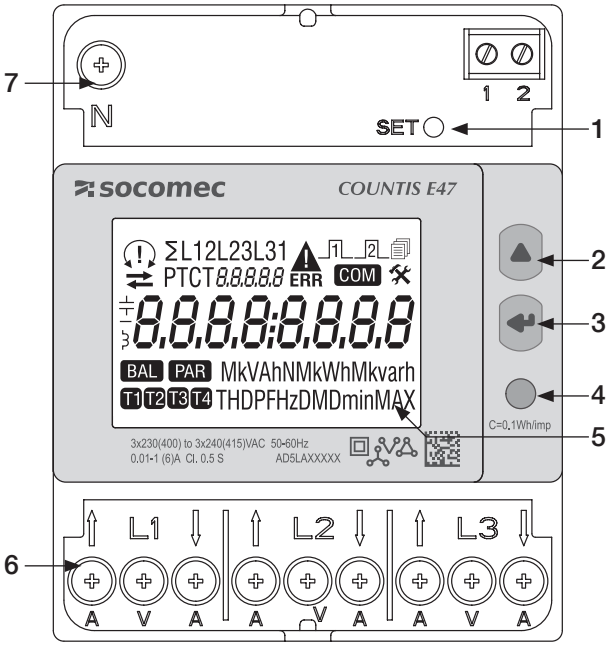

1. SET button
2. UP button
3. ENTER key
4. Metrological LED
5. LCD display
6. Current and voltage terminals
7. Neutral connection

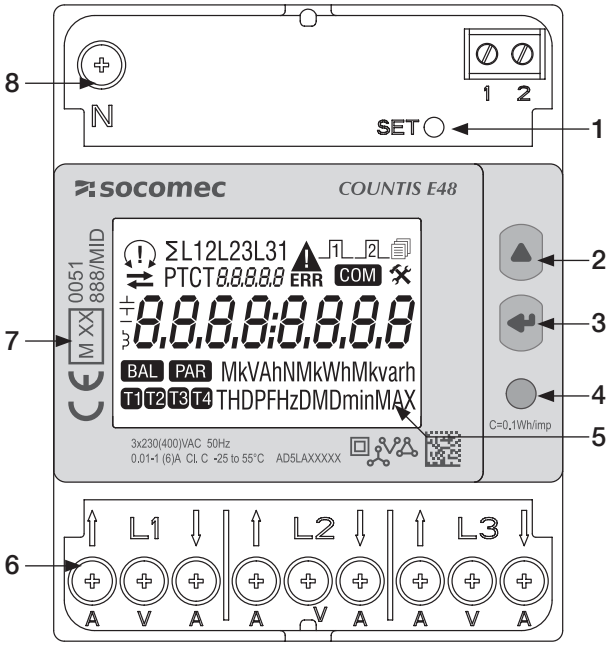

1. SET button
2. UP button
3. ENTER key
4. Metrological LED
5. LCD display
6. Current and voltage terminals
7. Information relating to MID certification
8. Neutral connection

4.4. LCD display

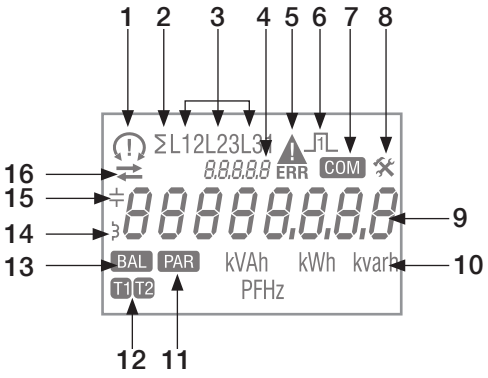

1. Phase sequences:
   132
   123
   one or multiple phases are not detected
2. System value
3. Value by phase
4. Identification of current menu
5. Device malfunction. Replace the device
6. Active pulse output
7. Active communication
8. Setup menu
9. Main zone
10. Measurement Unit
11. Partials meters. Flashing = partial meter has stopped
12. Tariff display
13. Energy balance
14. Inductive value
15. Capacitive value
16. Imported (→) or exported energy or power (←)

4.5. Dimensions

Dimensions: *in*/mm

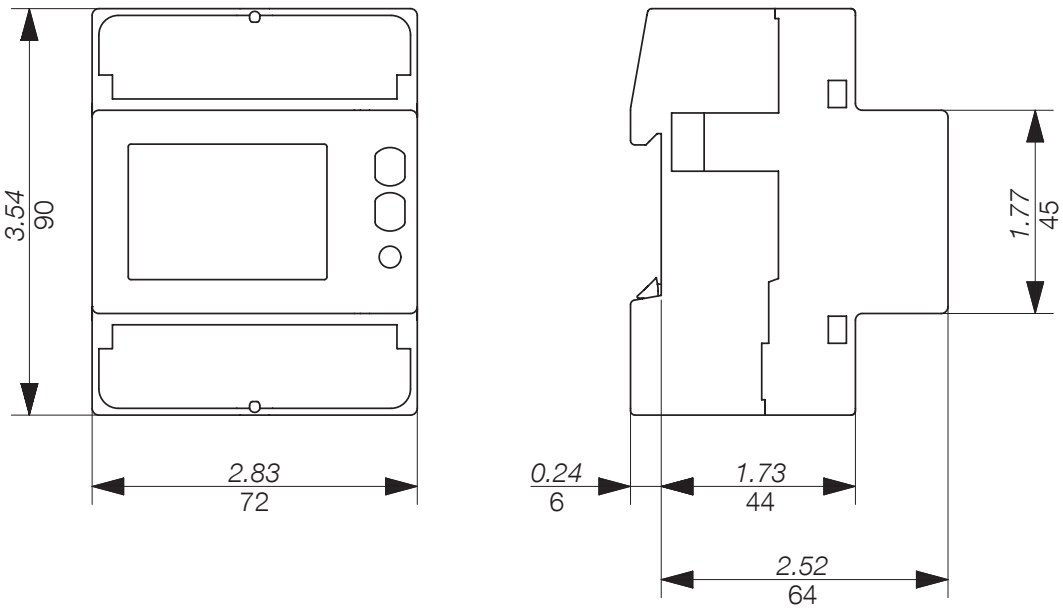

4.6. Electrical values measured

4.6.1. Measurements

Settings vary by model.

REALTIME VALUES	SYMBOL	MEASUREMENT UNIT	LCD DISPLAY	VIA COMMUNICATION
Phase to neutral voltage	∑V	V	●	●
	V1, V2, V3			●
Phase to phase voltage	∑U		●	●
	U12, U23, U31			●
Current	∑I	A	●	●
	I1, I2, I3, IN			●
Power factor	∑PF		●	●
	PF1, PF2, PF3			●
Apparent power	∑S, S1, S2, S3	kVA	●	●
Active power	∑P, P1, P2, P3	kW	●	●
Reactive power	∑Q, Q1, Q2, Q3	kVAr	●	●
Frequency	f	Hz	●	●
Phase sequence	CW / CCW		●	●
Power direction	⇄		●	
LOGGED DATA				
Total active and reactive energy	Ea, Er (∑ & by phase)	kWh, kvarh	●	●
Total apparent energy	Eap (∑)	kVAh	●	●
	Eap (per phase)			●
Total inductive and capacitive reactive energy	Er (∑)	kvarh	●	●
	Er (per phase)			●
Total active, reactive energy for each tariff (T1/T2/T3/T4)	Ea, Er (∑)	kWh, kvarh	●	●
	Ea, Er, Eap (∑ & per phase)	kWh, kvarh, kVAh		●
Total reactive, inductive and capacitive energy for each tariff (T1/T2/T3/T4)	Er (∑)	kvarh	●	●
	Er (per phase)			●
Active, partial energy for each tariff (T1/T2/T3/T4)	Ea (∑)	kWh	●	●
Active, reactive and apparent partial energy	Ea, Er, Eap (∑)	kWh, kvarh, kVAh	●	●
Energy balance	∑	kWh, kvarh	●	●
MISCELLANEOUS				
Present tariff	T	1/2/3/4		●
Partial counters	BY	START/STOP	●	
Pulse output status	⎍	Active / inactive	●	

Note: ∑ is the sum of the meter readings for each phase, divided by 3.

Note: if you have a 3-wire connection the following voltage readings are not available; phase-neutral, neutral current, phase power, power factor for each phase and power for each phase.

4.6.2. Energy balance definition

	FORMULA
kWh	(+kWh T1) – (-kWh T1) + (+kWh T2) – (-kWh T2)
kvarh	(+kvarh T1) – (-kvarh T1) + (+kvarh T2) – (-kvarh T2)

5. INSTALLATION

The paragraphs below describe how to install the device.

5.1. Recommendations and safety

Refer to the safety instructions (section "2. Hazards and warnings", page 4)

- Keep away from electromagnetic interference generator systems,
- Avoid vibrations with accelerations greater than 1 g for frequencies lower than 60 Hz.

5.2. DIN rail mounted

The COUNTIS E47/E48 can be mounted on a 35-mm DIN rail (EN 60715TM35). It must be used inside electrical cabinets.

6. CONNECTION

6.1. Connecting the COUNTIS E47/E48

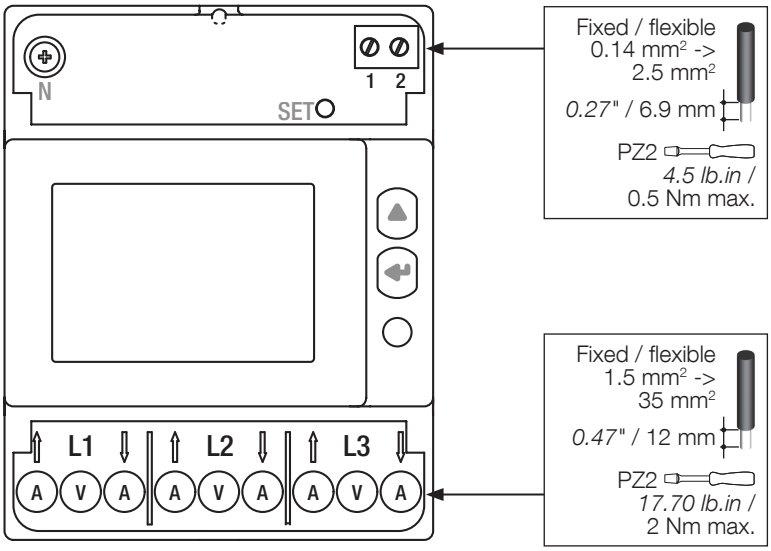

6.2. Connection to the electrical network and to the loads

The COUNTIS E47/E48 are intended for three-phase networks with neutral.

The earthing of CT secondary is **forbidden** in IT earthing system ; it is optional in TT/TN earthing system.

3 phases, 4 wires, 3 CT

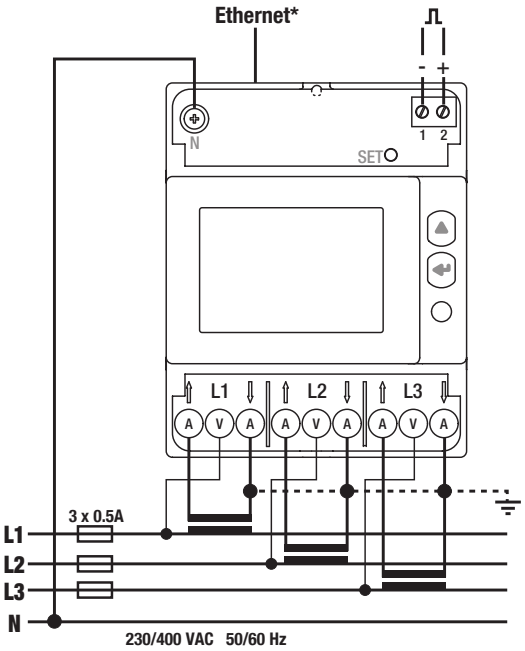

Ethernet
RJ45. The Ethernet cable must pass twice through the ferrite core, positioned at least 5 cm away from the device.

Pulse output
1: -
2: +
Optocoupler pulse outputs
Terminals 1-2 must be supplied with voltage between 5 and 27 VDC (27mA max)

Mains
L1 A: Current input/output
L1 V: Voltage input
L2 A: Current input/output
L2 V: Voltage input
L3 A: Current input/output
L3 V: Voltage input
N: Neutral connection

7. MID COMPLIANCE

The following points must be taken into consideration to ensure that the device is used in compliance with directive MID 2014/32/EU:

- **Type of network**
  The COUNTIS E48 meter complies with the MID directive for connection to networks: 3P+N (see "6.2. Connection to the electrical network and to the loads", page 10)
- **Fitting terminal covers**
  After connecting the device, ensure that the terminal covers are fitted properly and secured by the plastic seals provided with the device.
- **Locking the program button**
  Make sure the SET program button is locked after fitting the terminal cover.
- **Ethernet Communication**
  The information provided via the Modbus TCP communication is transmitted for information only and has no legal value.
- **MID Declaration of Conformity**
  The MID Declaration of Conformity is available on the website: www.socomec.com/en/countis-e4x

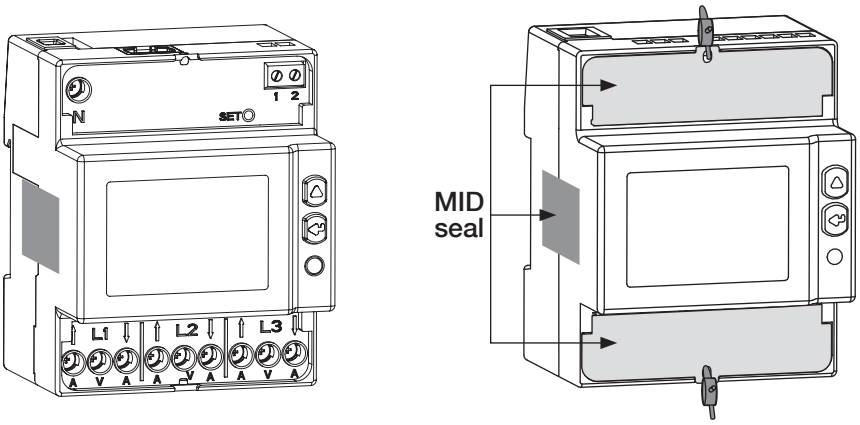

8. COMMUNICATION

8.1. General information

The Modbus TCP communication available on the COUNTIS E47/E48 communicates via an Ethernet link which is used to operate devices from a PC or an API.

8.2. Communication structure

The device communicates via a Modbus TCP protocol which involves a dialogue in accordance with a client/server structure. Communication is via TCP (Transmission Control Protocol) through the Ethernet communication port.

The default IP address is:
IP address: 192.168.0.4
Subnet Mask: 255.255.255.000
Gateway: 192.168.0.1
Modbus address: 5

A web server lets you access the measurement data:
The broadcast communication is available for the log that stores the tariff.

8.3. Communication tables

The communication tables are available online:

9. CONFIGURATION

The device can be configured directly from the COUNTIS E47/E48 screen in programming mode or via the communication link. The paragraphs below describe configuring using the screen.

9.1. Onscreen configuration

From the screen, go to programming mode to change your communication settings. How to browse through the programming mode is described in the following stages:

FUNCTION	WHERE	BUTTONS	PRESS
Switch menus	Every page with the exception of SETUP 1/2	↵	Realtime
Switch pages within a menu	Every page within a menu	▲	Realtime
Go to menu SETUP 2	Menu page SETUP	↵	> 3 sec
Go to menu SETUP 1	Every page with the exception of SETUP 1	**SET**	> 3 sec
Change a value/digit	Pages SETUP 1/2	▲	Realtime
Confirm a value/digit	Pages SETUP 1/2	↵	Realtime
Exit menu SETUP 1/2	Menu SETUP 1/2	↵	> 3 sec
Start/stop the displayed partial meter	Partial meter menu	↵ + ▲	Realtime
Reset the displayed partial meter to zero	Partial meter menu	↵ + ▲	> 3 sec
Display test	Every page with the exception of SETUP 1/2	↵ + ▲	> 10 sec

9.1.1. Detailed view of menu "SETUP 1"

In the "SETUP 1" menu you can configure the primary and secondary of the current transformers.

Press SET for 3 seconds using a screwdriver to put the device into programming mode.

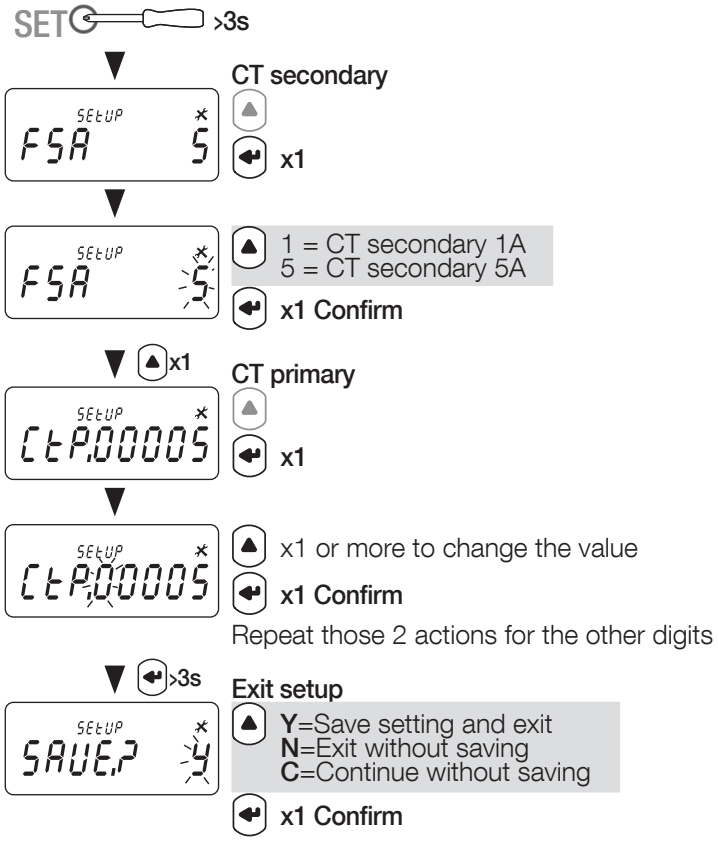

9.1.2. View all of the menu "SETUP 2"

In the SETUP 2 menu, press "↵" for 3 seconds to put the device into programming mode.

You can go to the different screens by pressing "▲":

SEtUP.2 ▲ ↵>3s

IP address 1

IP address 2

IP address 3

IP address 4

Netmask 1

Netmask 2

Netmask 3

Netmask 4

Gateway 1

Gateway 2

Gateway 3

Gateway 4

Reset partial energy to zero:
Ea+ partial (kWh) Tariff T1, T2, T3, T4
Ea+ partial (kWh)
Ea- partial (kWh) Tariff T1, T2, T3, T4
Ea- partial (kWh)
Eap partial (kVAh)
Er+ partial (kVarh)
Er- partial (kVarh)

Return to the first menu screen, "SETUP 2"

9.1.3. Detailed view of menu "SETUP 2"

SETUP.2 — >3s

Configuring with default settings	
SETUP Eth SdEF *	Configuring devices with default settings

x1

IP address 1	
SETUP IP1 192 *	000, 001, ... **192**, ..., 254, 255

IP address 2	
SETUP IP2 168 *	000, 001, ... **168**, ..., 254, 255

IP address 3	
SETUP IP3 000 *	**000**, 001, ..., 254, 255

IP address 4	
SETUP IP4 004 *	000, 001, ... **004**, ..., 254, 255

Netmask 1	
SETUP nEt1 255 *	000, 001, ..., 254, **255**

Netmask 2	
SETUP nEt2 255 *	000, 001, ..., 254, **255**

Netmask 3	
SETUP nEt3 255 *	000, 001, ..., 254, **255**

Netmask 4	
SETUP nEt4 000 *	**000**, 001, ..., 254, 255

Gateway 1	
SETUP GAt1 192 *	000, 001, ... **192**, ..., 254, 255

Gateway 2	
SETUP GAt2 168 *	000, 001, ... **168**, ..., 254, 255

Gateway 3	
SETUP GAt3 000 *	**000**, 001, ..., 254, 255

Gateway 4	
SETUP GAt4 001 *	000, **001**, ..., 254, 255

Reset energies	
SETUP rES ALL * PAR	Ea+ partial Tariff T1, T2, T3, T4; Ea+ partial; Ea- partial Tariff T1, T2, T3, T4; Ea- partial; Eap partial; Er+ partial; Er- partial

Go back to the first menu screen, "SETUP 2"

9.1.4. Example: setting the communication address

In "SETUP 2" mode (see page 17), go to the "IP address 1" screen

Example: changing the communication address to IP 007.

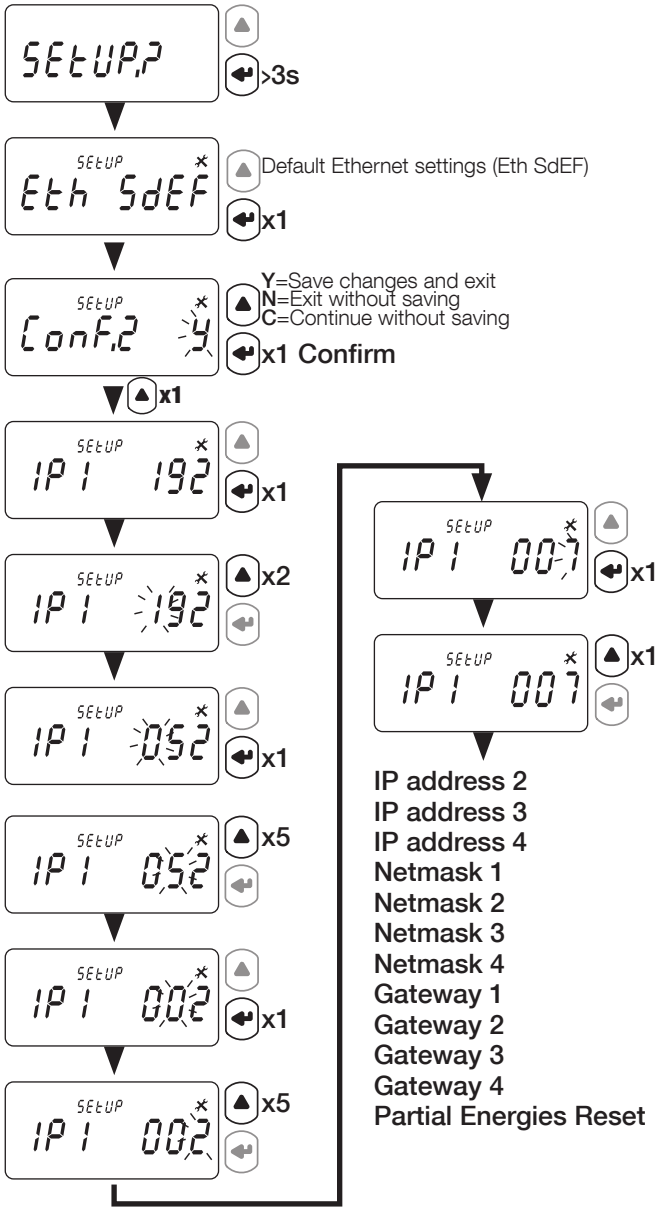

10. USE

Switch menus by pressing "↵". Press "▲" to see the electrical readings or information within a menu.

The menus and related measurements are described in the table below:

Tariff 1 (Tar.1)	Tariff 2 (Tar.2)	Tariff 3 (Tar.3)	Tariff 4 (Tar.4)	Total (tot)	Partial readings and energy balance (Par.b)	Realtime values (rt)	Information (inFo)
Tariff 1 - Imported and exported active energy	Tariff 2 - Imported and exported active energy	Tariff 3 - Imported and exported active energy	Tariff 4 - Imported and exported active energy	Total imported and exported active energy	Partial imported active energy by tariff	Active, apparent and reactive power	Metrological firmware version
Tariff 1 - Imported and exported inductive reactive energy	Tariff 2 - Imported and exported inductive reactive energy	Tariff 3 - Imported and exported inductive reactive energy	Tariff 4 - Imported and exported inductive reactive energy	Total apparent energy	Partial imported active energy	Phase/phase and phase/ neutral voltage	Non-metrological firmware version
Tariff 1 - Imported and exported capacitive reactive energy	Tariff 2 - Imported and exported capacitive reactive energy	Tariff 3 - Imported and exported capacitive reactive energy	Tariff 4 - Imported and exported capacitive reactive energy	Total imported and exported inductive reactive energy	Partial exported active energy by tariff	Three-phase current	Checksum of metrological firmware
Tariff 1 - Imported and exported reactive energy	Tariff 2 - Imported and exported reactive energy	Tariff 3 - Imported and exported reactive energy	Tariff 4 - Imported and exported reactive energy	Total imported and exported capacitive reactive energy	Partial exported active energy	Power factor	Checksum of non-metrological firmware
Go back to first screen, menu "Tar.1"	Go back to first screen, menu "Tar.2"	Go back to first screen, menu "Tar.3"	Go back to first screen, menu "Tar.4"	Total imported and exported reactive energy	Partial apparent energy	Frequency	Connection type
				Go back to first screen, menu "tot"	Partial imported and exported reactive energy	Go back to first screen, menu "rt"	Go back to first screen, menu "info"
					Active energy balance		
					Reactive energy balance		
					Go back to first screen, menu "Par.b"		

10.1. Detailed view of the menu for tariff 1, "Tar.1"

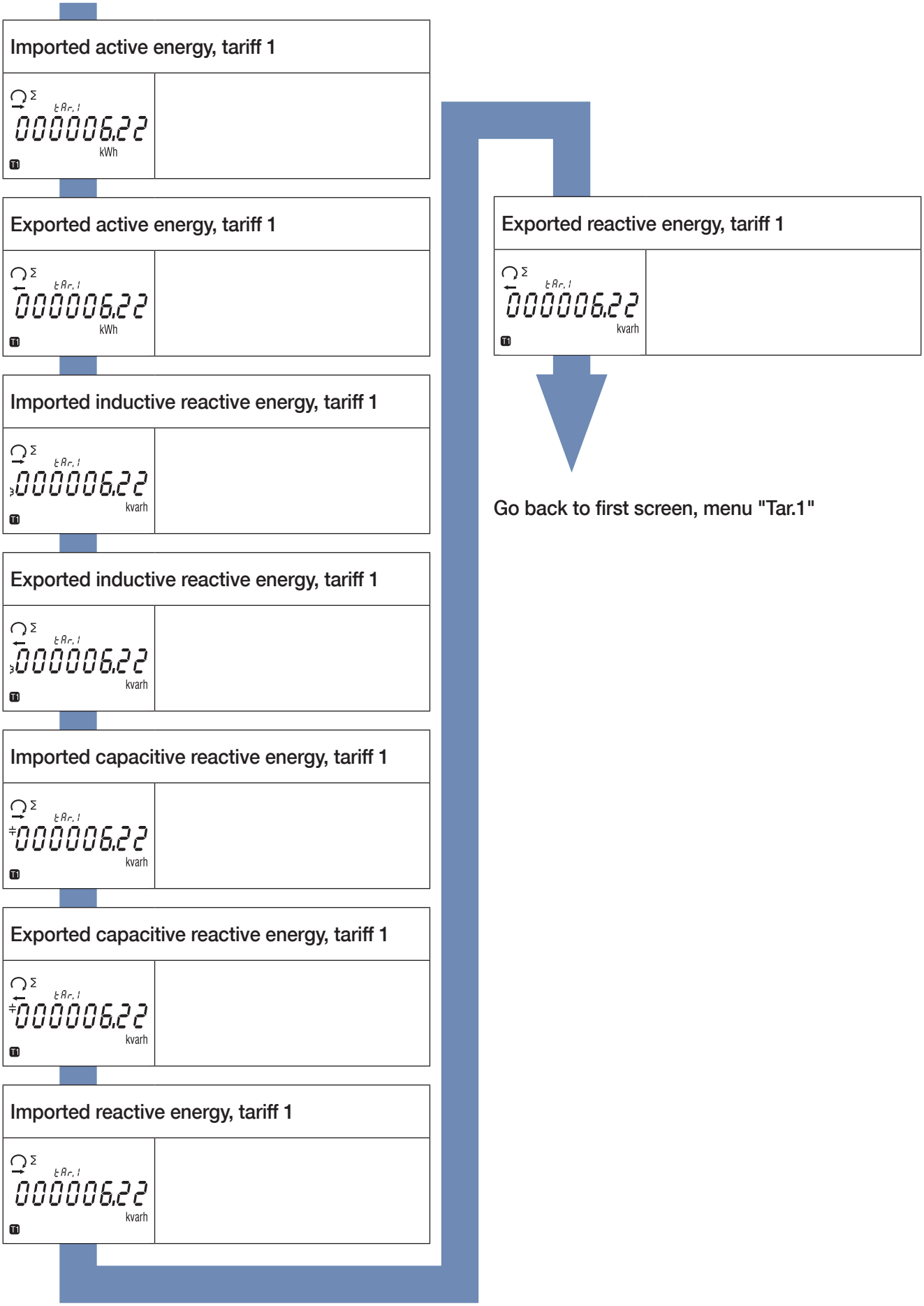

10.2. Detailed view of the menu for tariff 2, "Tar.2"

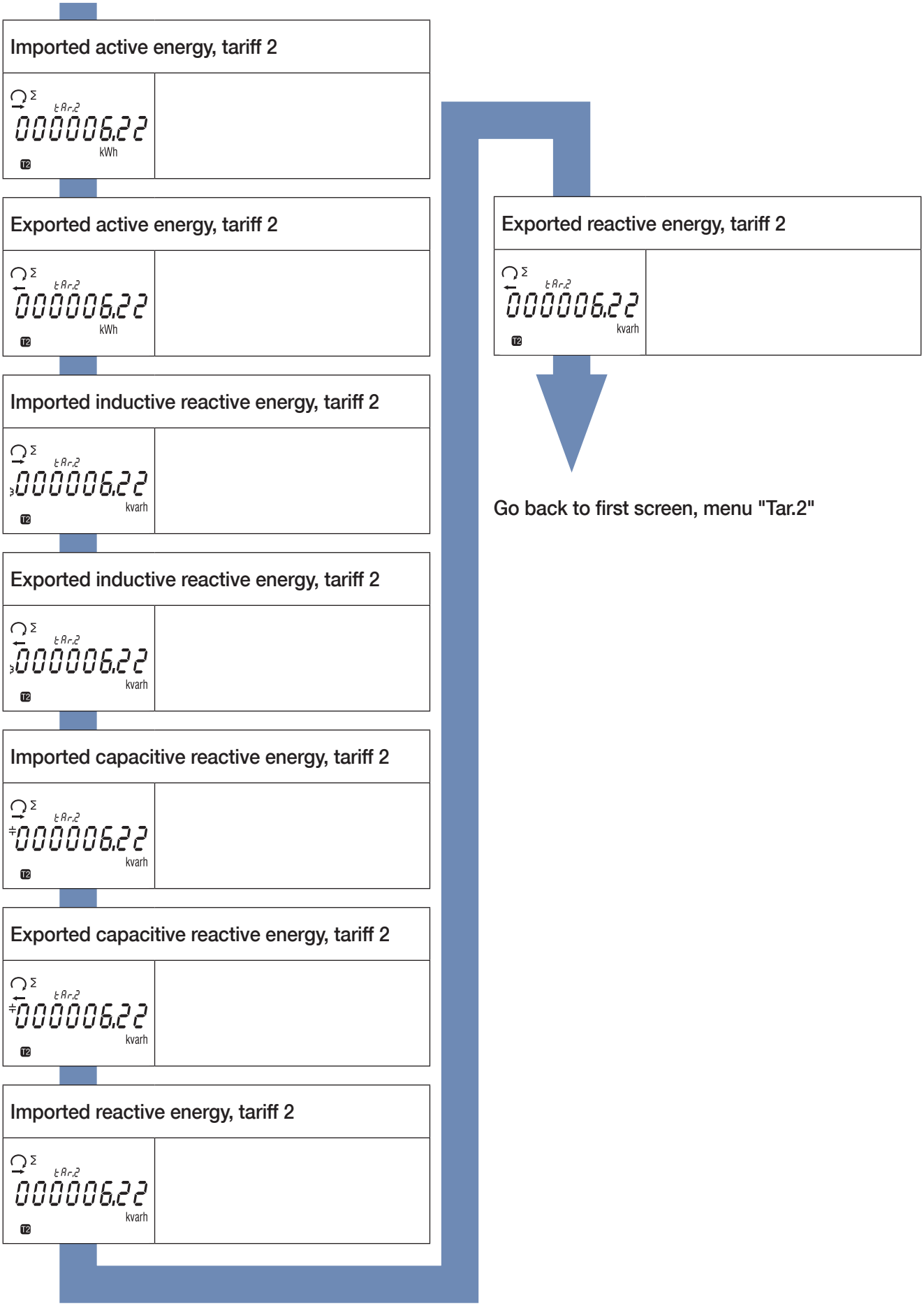

10.3. Detailed view of the menu for tariff 3, "Tar.3"

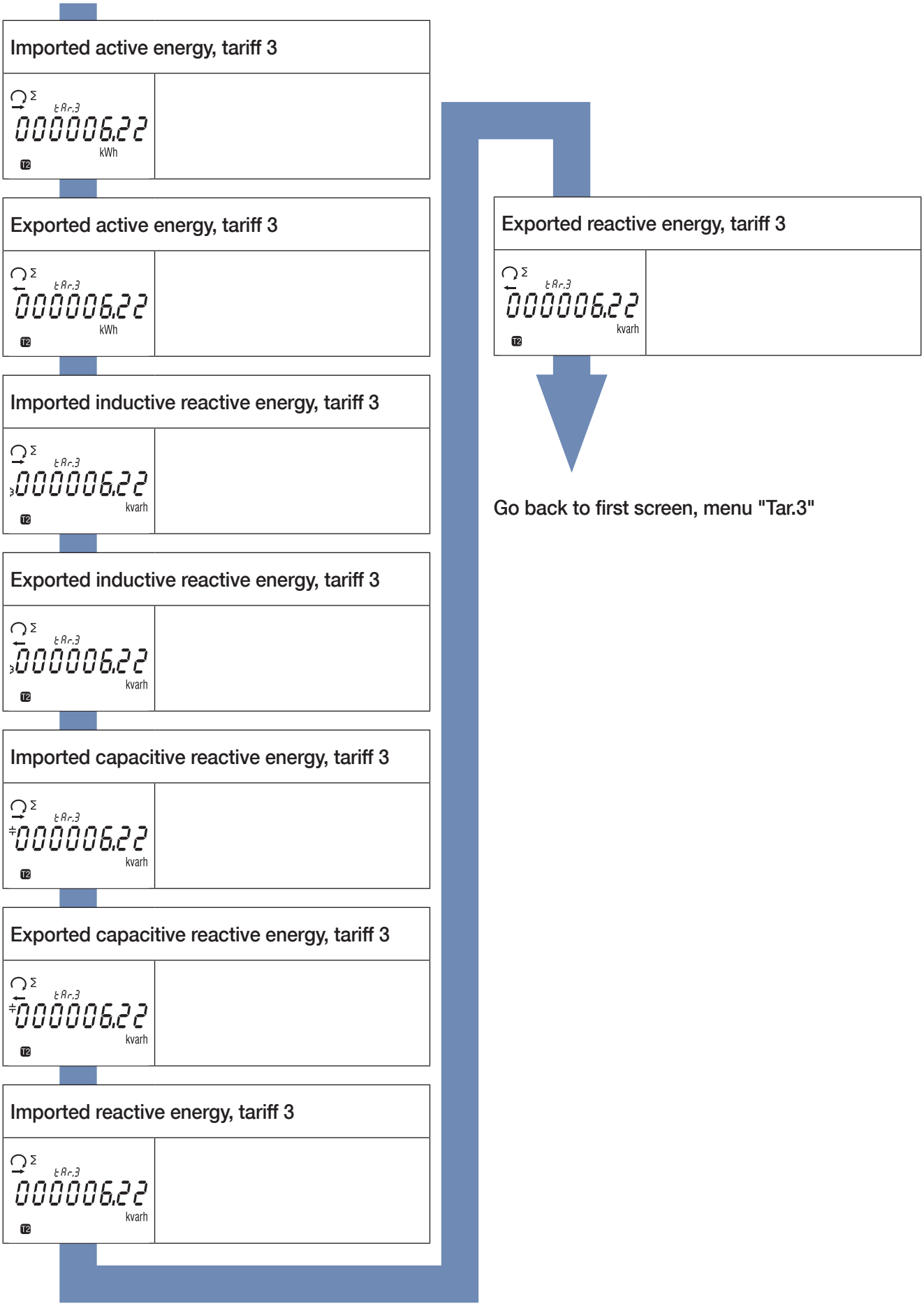

10.4. Detailed view of the menu for tariff 4, "Tar.4"

Imported active energy, tariff 4

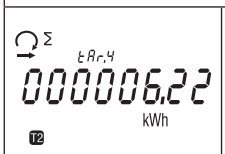

Exported active energy, tariff 4

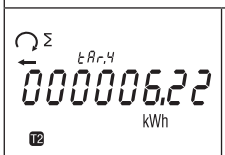

Imported inductive reactive energy, tariff 4

Exported inductive reactive energy, tariff 4

Imported capacitive reactive energy, tariff 4

Exported capacitive reactive energy, tariff 4

Imported reactive energy, tariff 4

Exported reactive energy, tariff 4

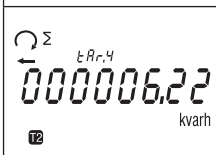

Go back to first screen, menu "Tar.4"

10.5. Detailed view of the total menu, "tot"

Total imported active energy	
L1 tot 000008.32 kWh	L1, L2, L3, ∑

Total exported active energy	
L1 tot 000008.32 kWh	L1, L2, L3, ∑

Total apparent energy	
Σ tot 000008.32 kVAh	∑

Total imported inductive reactive energy	
Σ tot 000008.32 kvarh	∑

Total exported inductive reactive energy	
Σ tot 000008.32 kvarh	∑

Total imported capacitive reactive energy	
Σ tot 000008.32 kvarh	∑

Total exported capacitive reactive energy	
Σ tot 000008.32 kvarh	∑

Total imported reactive energy	
L1 tot 000008.32 kvarh	L1, L2, L3, ∑

Total exported reactive energy	
L1 tot 000008.32 kvarh	L1, L2, L3, ∑

Go back to first screen, menu "tot"

10.6. Detailed view of the menu showing partial readings and the energy balance "Par.b"

Imported partial active energy for tariff T1	
Σ Par.b 000008.54 PAR kWh T1	Σ

Imported partial active energy for tariff T2	
Σ Par.b 000008.54 PAR kWh T2	Σ

Imported partial active energy for tariff T3	
Σ Par.b 000008.54 PAR kWh T2	Σ

Imported partial active energy for tariff T4	
Σ Par.b 000008.54 PAR kWh T2	Σ

Partial imported active energy	
Σ Par.b 000008.54 PAR kWh	Σ

Exported partial active energy for tariff T1	
Σ Par.b 000008.54 PAR kWh T1	Σ

Exported partial active energy for tariff T2	
Σ Par.b 000008.54 PAR kWh T2	Σ

Exported partial active energy for tariff T3	
Σ Par.b 000008.54 PAR kWh T1	Σ

Exported partial active energy for tariff T4	
Σ Par.b 000008.54 PAR kWh T1	Σ

Partial exported active energy	
Σ Par.b 000008.54 PAR kWh	Σ

Partial apparent energy	
Σ Par.b 000008.54 PAR kVAh	Σ

Partial imported reactive energy	
Σ Par.b 000008.54 PAR kvarh	Σ

Partial exported reactive energy	
Σ Par.b 000008.54 PAR kvarh	Σ

Active energy balance	
Σ Par.b 000008.54 BAL kWh	

Reactive energy balance	
L1 Par.b 000008.32 kvarh	

Go back to first screen, menu "Par.b"

10.6.1. Starting up the partial energy meter

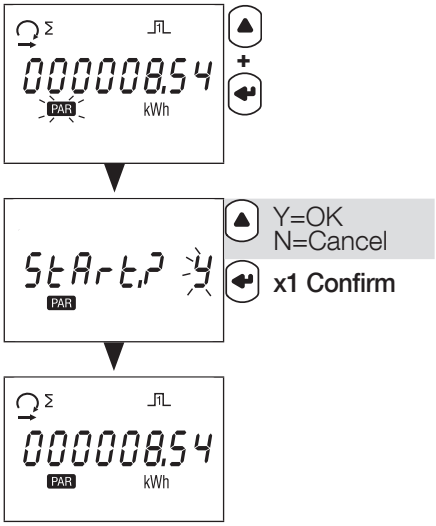

10.6.2. Stopping the partial energy meter

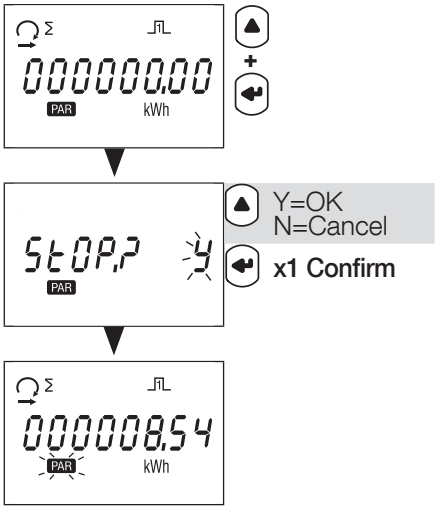

10.6.3. Resetting the partial energy meter to zero

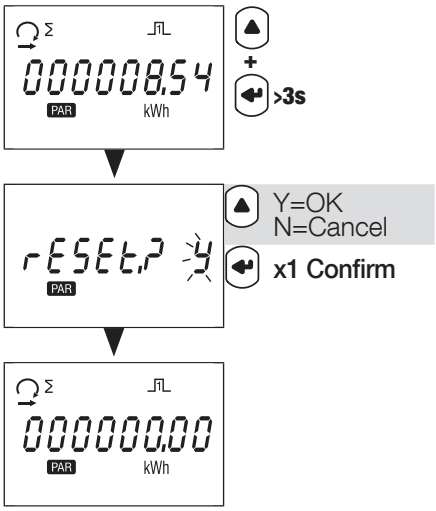

10.7. Detailed view of the menu for realtime readings, "rt"

Realtime active power	
L1 rt 11,50 kW	L1, L2, L3, ∑

Realtime apparent power	
L1 rt 11,50 kVA	L1, L2, L3, ∑

Realtime reactive power	
L1 rt 11,50 kvar	L1, L2, L3, ∑

Realtime phase/phase voltage	
∑L12 23 31 rt 151,3 V	∑

Realtime phase/neutral voltage	
∑L1 2 3 rt 075,7 V	∑

Realtime three-phase current	
∑ rt 69,67 A	∑

Realtime power factor	
∑ rt 0.800 PF	∑

Frequency	
∑ rt 50.00 Hz	

Go back to first screen, menu "rt"

10.8. Detailed view of the menu "info"

Metrological firmware version	
info rEL1 1.22	

Non-metrological firmware version	
info rEL2 3.02	

Checksum of metrological firmware	
info CS1 7A37	

Checksum of non-metrological firmware	
info CS2 Fb7d	

Installed communication port	
info Eth	

CT primary value (CtP)	
info CtP 4000	1…12000 A

CT secondary value (FSA)	
info FSA 5	1 or 5 A

Go back to first screen, menu "info"

11. DIAGNOSTICS MESSAGES

The following messages appear if there are connection or malfunction errors.

11.1. Missing phases

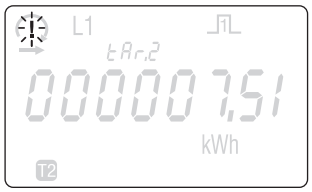

- If one or several phases are not detected, the exclamation point flashes on the screen. Example: phase not detected

11.2. Reversed phases

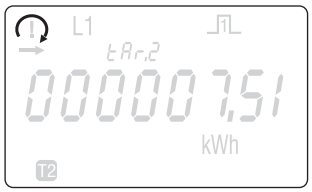

- If a 123 phase sequence is detected, the symbol appears.
- If a 132 phase sequence is detected, the symbol appears.

11.3. Malfunction

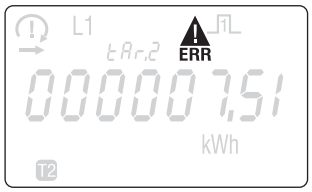

- If you see this message, the meter has malfunctioned and must be replaced.

12. ASSISTANCE

CAUSES	SOLUTIONS
Device not working	Check the neutral and phase 1 cable connections.
Phases not shown onscreen	Check the connections
Phases reversed onscreen	Check the network configuration
Error message	Check the meter is working OK

13. CHARACTERISTICS

GENERAL FEATURES	
Compliant with	European EMC Directive No. 2014/30/EU dated 26/02/2014 LV Directive No. 2014/35/EU dated 26/02/2014 Measuring Instrument Directive MID No. 2014/32/EU dated 26/02/2014 EN50470-1/-3 IEC 62053-21/-23
Frequency	MID model: 50 Hz ± 1 Hz Non MID model: 50/60 Hz ± 1 Hz
Power supply	Self-supplied
Rated dissipated power (Wmax.)	7.5VA (0.5W)
OPERATING FEATURES	
Three-phase connectivity	4 wires MID model: 3x 230/400 V Non MID model: 3x 230/400 V to 3x 240/415 V
Stores energy readings and settings	In FRAM memory
Identifies display of tariffs	T1, T2, T3 and T4
CURRENT MEASUREMENTS	
Type	via current transformers
CT burden (for each phase)	0,04 VA
Startup current (Ist)	2mA (Class 1) 1mA (Class C)
Minimum current (Imin)	0.10 A
Transition current (Itr)	50mA
Reference current (Iref)	1 A
Maximum current (Imax)	6 A
CURRENT TRANSFORMER AND FSA	
Minimum CT primary	1
Maximum CT primary	12000
CT Secondary	1 or 5 A
OVERLOAD CAPACITY	
Voltage Un continuous	288 VAC
Voltage Un momentary (1 s)	300 VAC
Current Imax continuous	6 A
Current Imax momentary	20 Imax for 0.5 s
VOLTAGE MEASUREMENTS	
Consumption	3.5VA max. per phase
Permanent max. voltage	290V phase-neutral / 500V phase-phase
FREQUENCY MEASUREMENT	
Frequency measurement	45-65 Hz
ENERGY MEASUREMENT	
Active	Yes
Reactive	Yes
Total and partial reading	Yes
MID metering	Bidirectional with three-phase
Resolution	10 Wh, 10 varh

ENERGY ACCURACY	
Active energy Ea+	Class C (EN 50470-3) Class 1 (EN 62053-21)
Reactive energy Er+	Class 2 (EN 62053-23)
TARIFF FOR EA+	
Tariff management	Yes (via communication)
Number of tariffs managed	4 (via communication)
METROLOGICAL LED (EA+, EA-)	
Pulse value	1000 pulses / kWh
Colour	Red
PULSE OUTPUT	
Type	Opto-isolated - 5 … 27VDC 27mA according to EN 62053-31
Pulse weight according to the set CT ratio	1 Wh → CT = 1 ... 4 5 Wh → CT = 5 ... 24 25 Wh → CT = 25 ... 124 125 Wh → CT = 125 ... 624 1000 Wh → CT = 625 ... 3124 10000 Wh → CT = 3125 ... 12000
DISPLAY	
Type	8-digit LCD with backlight
Refresh time	1 s
Backlight activation time	10 s
Active energy: 1 display, 8-digit	00000.000 kWh ... 999999.99 MWh
Reactive energy: 1 display, 8-digit	00000.000 kvarh ... 999999.99 Mvarh
Apparent energy: 1 display, 8-digit	00000.000 kVAh … 999999.99 MVAh
Instantaneous active power: 1 display, 4-digit	0.000 kW ... 99.99 MW
Instantaneous reactive power: 1 display, 4-digit	0.000 kvar ... 99.99 Mvar
Instantaneous apparent power: 1 display, 4-digit	0.000 kVA ... 99.99 MVA
Intantaneous voltage: 1 display, 4-digit	000.0 ... 999.9 V
Intantaneous current: 1 display, 4-digit	0.000 ... 99.99 kA
Power factor: 1 display, 4-digit	0.000 … 1.000
Frequency: 1 display, 4-digit	45.00-65.00 Hz
COMMUNICATION	
Ethernet	Full duplex
Protocol	Modbus TCP, HTTP, NTP, DHCP
Baudrate	10/100 Mbps
Web server password	Username: admin / password: Admin Username: user / password: user
Default IP address Default Gateway IP address Default netmask Default slave address	192.168.0.4 192.168.0.1 255.255.255.000 5
SAVING	
Energy registers	In FRAM memory

ENVIRONMENTAL CONDITIONS	
Mechanical environment	M1
Electromagnetic environment	E2
Operating temperature range	-25° C to +55° C
Storage temperature	-25° C to +75° C
Humidity	≤ 80%
Installation	Internal (box/cabinet)
Vibrations	±0.075 mm
HOUSING	
Dimensions W x H x D (mm)	Modular - width of 4 modules (DIN 43880) 72 x 90 x 64
Mounting	On DIN rail (EN 60715)
Connection capacity, tightening torque	See chapter "6. Connection", page 10
Protection index	Front: IP51 - casing: IP20
Insulation class	Class II (EN 50470-1)
Weight	440 g

14. GLOSSARY OF ABBREVIATIONS

info	Menu information
rEL1	Metrological firmware version
rEL2	Non-metrological firmware version
CS1	Checksum of metrological firmware
CS2	Checksum of non-metrological firmware
tAr.1	Menu for Tariff 1
tAr.2	Menu for Tariff 2
tAr.3	Menu for Tariff 3
tAr.4	Menu for Tariff 4
tot	Total menu
PAr.b	Partial readings and energy balance menu
rt	Realtime values menu
SEtuP.2	Setup 2 menu
Addr	Slave address
bAud	Communication speed in bauds (bits per second)
Prty	Communication frame parity
n	No parity
o	Off parity
E	Even parity
StoP	Frame stop bit
1	1 stop bit
2	2 stop bits
rES	Reset partial energy
ConF?	Confirm selection
Y	Save and exit
N	Exit without saving
C	Continue without saving
tAr	Tariff management option
COM	Tariff management via communication
diG	Tariff management via device input

CORPORATE HQ CONTACT:
SOCOMEC SAS
1-4 RUE DE WESTHOUSE
67235 BENFELD, FRANCE

www.socomec.com

Non contractual document. © 2025, Socomec SAS. All rights reserved.

547224C

Innovative Power Solutions